OCCASION

This publication has been made available to the public on the occasion of the 50th anniversary of the United Nations Industrial Development Organisation.

DISCLAIMER

This document has been produced without formal United Nations editing. The designations employed and the presentation of the material in this document do not imply the expression of any opinion whatsoever on the part of the Secretariat of the United Nations Industrial Development Organization (UNIDO) concerning the legal status of any country, territory, city or area or of its authorities, or concerning the delimitation of its frontiers or boundaries, or its economic system or degree of development. Designations such as "developed", "industrialized" and "developing" are intended for statistical convenience and do not necessarily express a judgment about the stage reached by a particular country or area in the development process. Mention of firm names or commercial products does not constitute an endorsement by UNIDO.

FAIR USE POLICY

Any part of this publication may be quoted and referenced for educational and research purposes without additional permission from UNIDO. However, those who make use of quoting and referencing this publication are requested to follow the Fair Use Policy of giving due credit to UNIDO.

CONTACT

Please contact publications@unido.org for further information concerning UNIDO publications.

For more information about UNIDO, please visit us at www.unido.org

UNITED NATIONS INDUSTRIAL DEVELOPMENT ORGANIZATION
Vienna International Centre, P.O. Box 300, 1400 Vienna, Austria
Tel: (+43-1) 26026-0 · www.unido.org · unido@unido.org

17148

REPORT
ON
ELECTRIC MOTORS

prepared

by

ING. SATISH DEWAN *

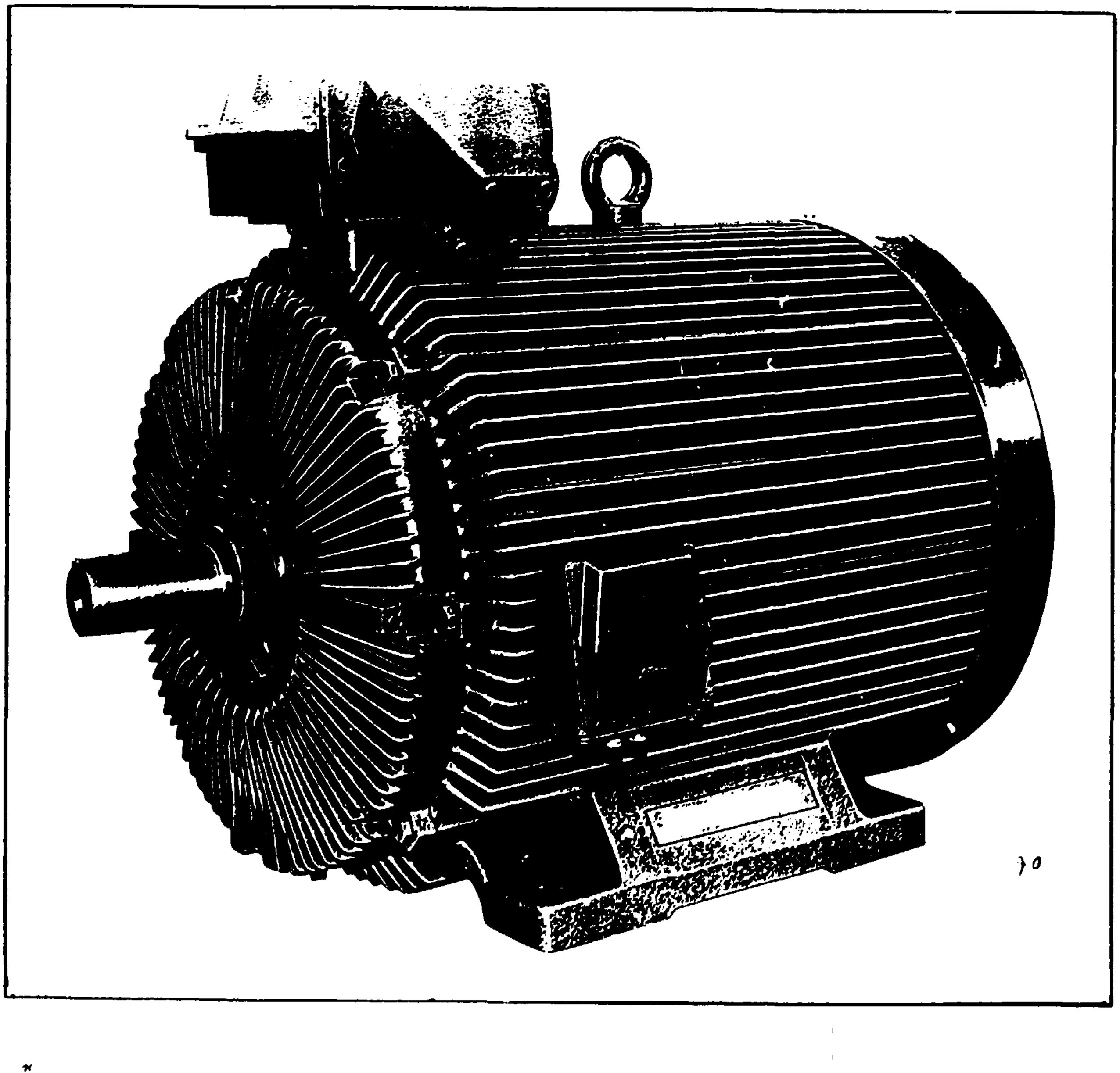

---

* UNIDO-CONSULTANT

OCTOBER 1988

Table of Contents

INTRODUCTION

The work assignment of the Consultant for writing a report on "Electric Motors" is to "revise the existing subject file and to delete out-of date material, to supply new material and be responsible for organizing the different sections. To organize the file in sections according to the more frequent queries received on the subject from developing countries."

The Consultant has taken the following actions:

1. Sent out 45 letters to various manufacturers of electric motors to different parts of the world, and requested to to send us their latest descriptive literatures on their manufacturing program.
2. A list of firms, attached as Appendix no. 1, shows the replies received from the manufacturers.
3. The above replies with brochures are maintained in 5 different Files marked "General Information-on Electric Motors", 1 to 5.

The descriptive material received are of very general type and do not convey any assistance on manufacturing or production of electric motors.

Since there are a number of enquiries received from the developing countries requesting for information on the aspects of systematic approach of manufacturing or on the process of production line, the Consultant has tried to give on it's own, within the limitations of the SSA-Contract, brief description of methodical approach to the manufacturing of electric motors.

The literatures resting with the earlier two files No. 1 & 2, are very much outdated. Some of the brochures seen are from 1969, 1973, 1975, and 1978. These two files have not been disturbed and no papers have been removed. The latest material and technology available in the field of electric motors are placed in the above mentioned 5 files.

2. The Product-Electric Motor

The electric machine which converts electrical energy into mechanical energy, is known as the 'Electric Motor'. The word "motor" comes from the Latin, which means "mover." Since index of industrialisation of a country depends on the per capita consumption of electricity, therefore every developing country must try to develop per capita consumption of electricity at a fast rate by increasing their production methods systematically. And this, can be achieved by manufacturing electric motors, where in almost all electrical industrial appliances except where heating is involved, electric motors are used as prime movers

The scope of electric motors in any country is, therefore, tremendous and considering that the power generation is expected to grow, the electric motor industry can definitely look for a bright future ahead.

Today civilized world depends more heavily than ever on one of the most efficient and most important devices ever invented the electric motor. Without it, the wheels of industry would grind to a halt, and millions of time and labor-saving devices would be rendered useless. No day passes without the discovery of new ways to use and control this prime motive force.

The Electric motor consists of two major portions (a)Mechanical feature and (b) Electrical design. These two points are briefly described under paragraphs 2.2 and 2.3, below.

2.1 Different types of electric motors

An Electrical manufacturing industry does not produce all types of electrical motors. Different manufacturer, manufacture various types of motors depending on the set-up of the individual industry and the demand in that particular area. Among the most common type, are the induction motors, which are used more extensively because of their simplicity. But then again to go into the details of various type of motors used in different kind of functions and different aspects of utilisation, such as AC/DC motors, fractional horsepower, split-phase motors, capacitor motors, repulsion-type,polyphase, textile motors-power loom - spinning machines, flameproof/explosion proof motors, etc. etc.,see Appendix nc. 2, showing some of the different types of electrical motors.

2.2 Mechanical Section

After the Stators come from the foundry section, they are dealt here in the mechanical section to see that the design comply with the applicable Standards and Regulations like VDE530, AS, IEC 34-1, 72,79 and 85, or CENEL document - Rules for electric machines.

For Standards see point 5 of this report.

Mounting arrangements

The most common mounting arrangements are illustrated by the figures below.

(1) Foot-mounting motors

(a) Horizontal

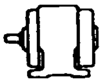
B 3

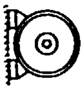
B 6


B 7


B 8

(b) Vertical

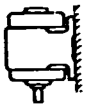
V 5

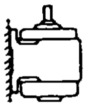
V 6

(2) Flange-mounted motors

(a) Horizontal

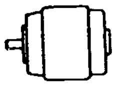
B 14

(b) Vertical

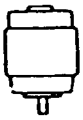
V 18

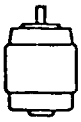
V 19

(3) Foot-mounted motors

(a) Horizontal

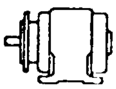
B 3/B 5

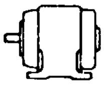
B 3/B 14

(b) Vertical

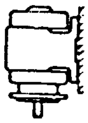
V 1/V 5

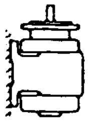
V 3/V 6

Types of enclosure

Motors: IP 44 - Protection against granular foreign particles (splash-proof)

Terminal box: IP 55 - Protection against dust deposits (splash-proof)

Material:

Frame castings are normally of light metal. The light-metal pressure diecasting is provided with cooling ribs. The castings have longitudinal ribs. The integral feet ensure utmost stability.

Endshields are also of light metal,

Fans are either of plastic material or of light metal.

Bearings the motors are provided with commercial rolling-contact bearings with permanent lubrication or relubricating device. Where two grooved ball bearings are used, these are preloaded, which results in a very quiet running. Due to the fact that the bearing are amply rated, motors offers a high degree of operational reliability. Both bearing have a guiding function (for location of rigid bearing, see table 1). Rolling-contact bearing cannot be replaced by sleeve bearings.

Location of fixed bearings

TABLE - 1

Number of poles	Drive end	Non-drive end
2 to 8 -pole	-	-
2 to 12-pole		x

Lubrication

The bearings are lubricated with lithium-based rolling-contact bearing grease. Some motors have permanent grease lubrication and are maintenance-free for a period of 3 to 5 years, depending on the type of duty, frame size, speed and cooling medium temperature in the case of coupling drive and clean environmental conditions.

2.3 Electrical Section

Voltage

Motors can be for any supply voltage between 220V and 660V. Standard voltage for three-phase motors are 380V, 500V and 660V. Motors for two different supply voltages (e.g.220/ 380 ; 220/440) have non-standard windings.

Frequency

All technical data shown are based on a 50 HZ supply. Motors designed for 50 HZ may be connected without modification to 60 HZ supplies.

Connection

Single-speed motors : The L1, L2, L2. supply phase are connected to terminals U1, V1, W1. Motors may be connected in star or delta for direct-on-line starting. Star connections is used for the higher voltage (see fig. 2)

Winding connections
for 220C / 380V
and direct-on-line
starting for operating
voltage:

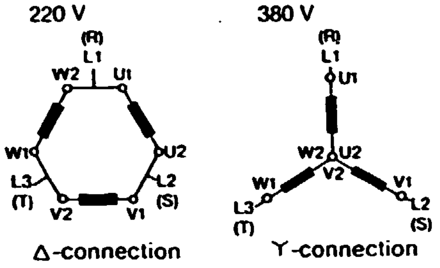

Terminal boxes are normally fitted with 6 stator terminals and an earth terminal. This enables for example, motors equipped with windings for 380V connecting links are arranged in the same way as for Dahlander winding motors. Supply phase L1, L2, L3 are connected to terminals 1U,1V,1W to provide low-speed operation. For high speed operation pahses L1, L2, L3 are changed to terminals 2U, 2V, 2W on the motor terminal board. When either set of windings is connected to the mains, the other set must remain unconnected.

Motor terminal boxes are normally fitted with 6 stator terminals and one earth terminal

Multiple-speed motors for three speeds

Motor designed for operation at three speeds always obtain two speeds by using a Dahlander winding, and the third speed from a seperate winding. The sequence of these connections is dependent on the speed steps desired. The terminal boxes are normally fitted with 9 stator terminals. Control gear must be selected in accordance with the connecting diagram supplied with each motor.

Star/Delta starting

When using this technique for starting, the motor is first connected in star to the supply and then switched over to delta as soon as the motor has run up to speed.

Star/Delta starting may only be used when the load torque is sufficienty low to allow the motor to run up to normal speed whilst connected in star. It should also be from star to delta connection. Motor suitable for star/delta starting provide rated output when connected in delta.

Please note that the Consultant has not gone in detail, but briefly pointed out the major aspects of mechanical and electrical sections.

3. Process of Manufacture-Systematic Approach

The above chapter 2, has described the technical part of the electrical motor. This section deals with the methodical movement of a manufacturing unit, so that any developing country who wish to start a manufacturing unit, would find it convenient to understand this process of manufacture.

3.1 Flow chart of a manufacturing unit

The flow diagram shown below is a simple one, showing the mechanical and electrical sections of a factory.

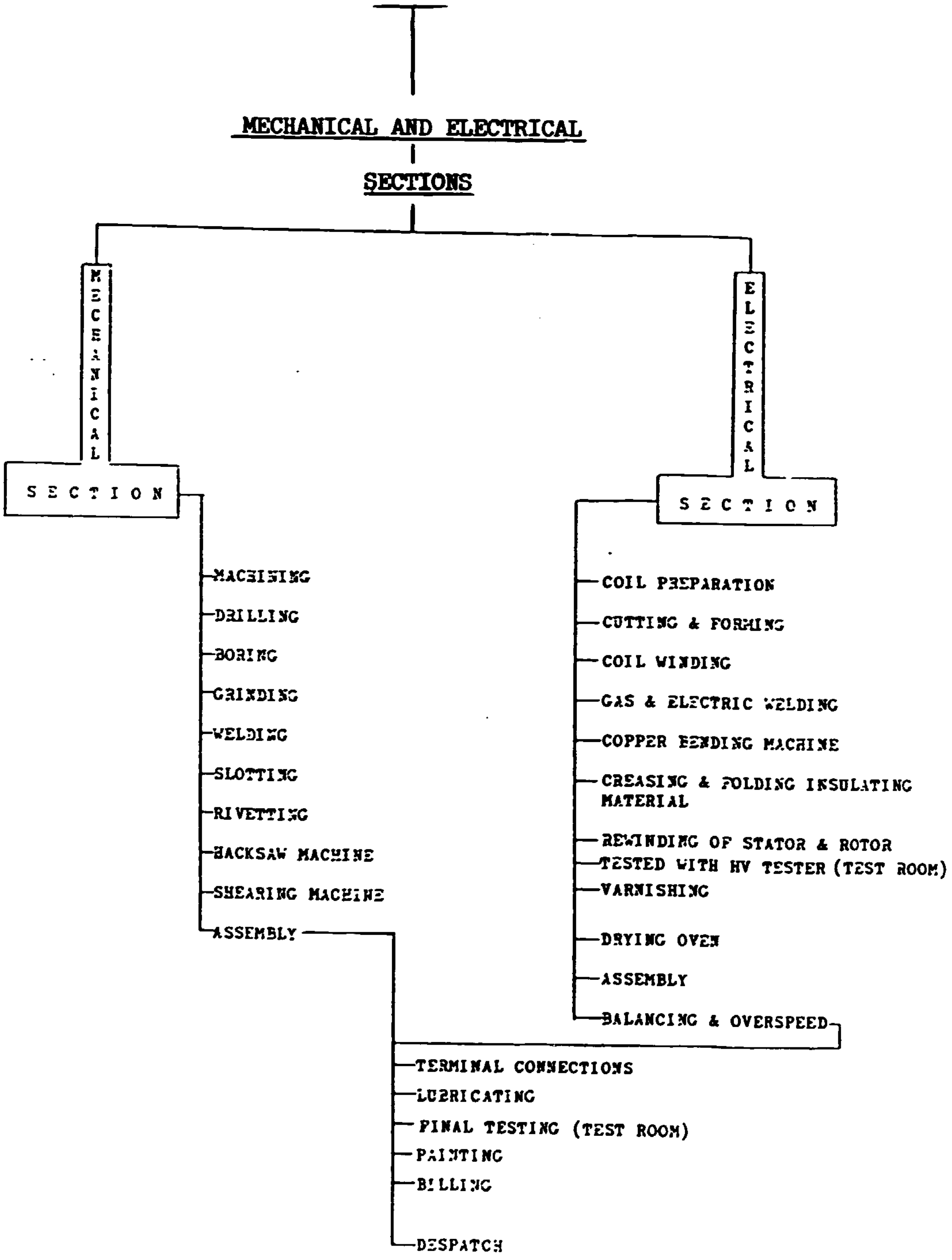

Mechanical Section

The function of this section is mainly to attend to the mechanical repairs and replacement of parts. All the machining operations which will be applied on the electric motor are shown below in flow sequence.

Shaft Machining

- Facing and centering
- Key seat forming
- Grinding

Rotor Machining

- Shaft inserting
- Machining the tope of lathe
- Balancing
- Bearing inserting

Machining the Body

- Ring grove forming
- Machining the damaged part
- Machining the cover

Machining Small parts

- Ring cutting
- Washer cutting

The machinery and equipment needed for operating this section are listed in para 3.2, below.

Dismantling & Reassembling the Motor

The disassembly of machines is an important phase of repair work which must be done without damage to the component parts. The stator end shield replacement of new bearings and changing of other parts should be carefully punch-marked to facilitate proper positioning when they are reassembled.

The dismantel and reassemble the motor one must proceed as follows :

(i) Removing the cowl

Remove the cowl by removing the fixed screws.

(ii)Removing the external fan:

This can be done by removing the circlip, loosening the setscrews or by taking out the feather-key as the case may be. Two holes are provided on the fan for facilitating the removal of fan by special tackle. Fan should not be hammered out under any circumstances.

(iii)Removing the bearing cover and end shield on the fan side

Remove the screws of the bearing cover and the screws of the end shield. Remove the bearing cover and the end shield.

(iv)Removing the end shield at the drive end:

Loosen the bolts of the end shield.

Withdraw the rotor and shield from the stator together with the pulley, coupling or pinion; be careful not to damage the windings. If a pulley, pinion or the like is to be removed this should be done prior to unscrewing the bearing cover and the end shield. After loosening the grub screw, the pulley, etc., is removed by means of puller. Then the end shield at the drive end can be removed as described above. Drive the end shields out of the cover seats by light blows with a wooden hammer; do do not strike the motor shaft as this might damage the bearings. The antifriction bearings must only be removed from the shaft if they are damaged and must be replaced. For the removal of the bearings a bearing puller should be used. After the motors have been repaired or cleaned, reassemble the parts in the reverse. In order to facilitate the fitting of the bearing covers threaded pins (locating screws) are screwed into the threaded holes of the inner bearing covers before the end shields are put on.

(v)<u>Lubricating the bearings</u>:

After dismantling the motor (as described above) clean the bearing covers in clean petrol. When lubricating the bearings, be sure to observe the utmost cleaniness. Do not use a wooden spatula for applying the lubricating grease; use either a lubricating tube or a spatula of metal or plastic. The bearing should be heated in hot spindle oil (approx. 75 Centigrade), before mounting. Turn the bearing slightly during lubrication. Only about one third of the space between the ball-bearing races should be filled with grease. If too much grease is filled in the balls cannot run freely, the bearing becomes hot, and noises occur. The antifriction bearing of the motor are given a first filling with antifriction bearing grease. With normal 8-hour operating per day, this would last about 2 years. As the operating conditions, however, are often less favourable (high ambient temperature, long hours of continuous duty, varying bearing pressurre, etc.) the relubrication intervals vary greatly.

(vi) Lubricants:

In all motors " Shell Alvania " No. 2, Lithium based grease may be used.

Different types of greases having different properties and therefore they should not be mixed. Sodium-base greases, for instance, are incompatible with lithium-base greases. The same sort of grease should therefore be used all the time, or the bearing must be thoroughly cleaned before a different type of grease is applied. Too frequent regreasing is, on the other hand, not only useless but even increases the temperature of the bearings.

(vii)Replacement of Bearings:

Damaged bearing must be replaced. The bearing should only be removed from the shaft if the bearings are damaged and need replacement.

New bearings are fitted as follows:

Heat the ball bearings in hot oil or with air a a temperature of 75 centigrade and slide them onto the shaft. Heavy blows must be avoided as they may severely damage the bearings. Remove the anti-corrosion grease on the shaft thoroughly with tri-chloroethylene before mounting the bearing; coat the races, rollers and cage with grease.

When mounting take care that the inner bearing cover is always inserted on the shaft before the bearing is mounted. When the motor is assembled, check all screws for tight fit and make sure the shaft can be rotated easily.

Electrical Section

The flow of the Electrical Section is as follows :

Coil Preparation

- Coil forming
- Coil placing
- Binding the ends
- Coil testing

Lacquering & Scratching the inside

- Varnishing
- Drying
- Scratching

Assembly

- Assembling of parts
- Testing
- Assembly of stator and rotor
- Final testing - painting - packing

After having passed through various operations in test room and mechanical section, the motor arrives in winding shop for mainly rewinding purposes. Briefly, the coils are wound and formed to be laid into the cast iron stator housing. It is insulated, varnished, dried in the oven, high voltage testing, assembled, finally tested painted and then goes to despatch.

3.2 Machinery and Equipment

It would become a very lengthy chapter if one has to give complete mechanical, electrical, structural and other equipment to set-up a motor factory.

However, one must start taking into account land and building required for a suitable production unit. Machinery and equipment would depend on the size of the factory and what capacity they intend producing. One must start from the Transformer and Switchgear room, Pump-house, General Office equipment, Canteen, Wash-room and toilets, Security and Time Office, Medical Services equipment, Cranes, etc. Herebelow is a general list of machinery and equipment required in the foundry, mechanical, electrical and test room sections:

(a) Foundry Shop

- Moulding boxes
- Sand Mixing machines
- Core baking ovens
- Coupla of various capacities
- Foundry tools and equipment

(b) Mechanical Section

- Centre lathe machine, 2.5 m.
- Capstan lathe machine, 3.5 cm bar capacity
- Universal grinding machine
- Double-ended grinder 150 mm diameter
- Radical drilling machine 3 cm capacity

- Ball press
- Gas welding equipment
- Power hachsaw machine 15 -17 cm capacity
- Hand lever press for rivetting.
- Shearing machine
- Slotting machine

(C) Electrical Section

- Complete Coil Winding Machine with accessories, multiple disc clutch and brake, electriccally controlled winding counter which acts automatically on the disc clutch and brake after a preset number of turns have been reached.
- Winding tool and coilers with 5 and 6 adjustable divisions, winding device, special segments for winding device, wire take-offs with wire tensioning device, suitable for coils up to 500 mm diameter.
- Bandaging Unit for Rotors
- Gas welding equipment/electric welding apparatus
- Hand operated shearing machine for insulating material
- Heavy wooden stands for Rotors
- Insulation creasing tool for slot inserting insulation
- Hand type bending and folding machine for insulating material, foldings exceeding 250 mm can be folded in succeeding operations after being shifted through the folding apparatus.
- 1 No. - Varnishing tank
  size : 2 x 1.5 x 1.5 m
  approximate 60 litre liquid reservoir

- 1 No. - Baking drying oven with temperature control, equipped with trolley-rollers suitable for 1 medium size workshop
  capacity - 42 KW

  2 small size workshop
  capacity - 28 KW

- 1 No. - Dynamic balancing machine, suitable for rotors

(D) <u>Test Room</u>

- Small precision tools
- Hand tools
- High voltage testing equipment, with voltage regulating device 100 - 500 V, instruments
- Testing panel/board, with 3-phase wattmeter, Voltmeter, Ammeter, change-over-switches, Frequency meter, Power factor meter, Current transformer - sec. 5 A - primary 2.5, 10, 25, 100 A, with induction regulator or Auto-trafo 20 KVA, 0 - 500 V, 3-phase system
- Test bed with arrangement for measuring torque, speed and carrying out load tests
- Meggar insulation tester 500 Volts, 80 meg Ohms
- Instruments such as hand technometer, thermometers, multimeters, wheatstone bridege, wire gauges, etc.
- D.C. Dynamo 15 - 20 KW (general)
- Stator & Rotor tester
- Insulation removing equipment from enamelled copper wire and resistance
- Other miscellaneous equipment and tools required to set up the workshop
- Quality control testing devices

3.3 Stator and Rotor

The most common form of induction motor is the squirrel-cage type. This motor has derived its name from the fact that the rotor, or secondary, resembles the wheel of a squirrel-cage. Its universal use lies in its mechanical simplicity, its ruggedness, and the fact that it can be manufactured with characteristics to suit most industrial requirements.

Construction

A squirrel-cage motor consists essentially of two units, namely:

1. Stator.
2. Rotor.

The stator (or primary) consists of a laminated sheet-steel core with slots in which the insulated coils are placed. The coils are so grouped and connected as to form a definite polar area and to produce a rotating magnetic field when connected to a polyphase alternating-current circuit. The rotor (or secondary) is also constructed of steel laminations, but the windings consist of conductor bars placed approximately parallel to the shaft and close to the rotor surface. These windings are short-circuited or connected together at each end of the rotor by a solid ring. The rotors of large motors have bars and rings of copper connected together at each end by a conducting end ring made of copper or brass. The joints between the bars and end rings are usually electrically welded into one unit, with blowers mounted on each end of the rotor. In small squirrel-cage rotors, the bars, end rings, and blowers are of aliminum cast in one piece instead of welded together. The air gap between the rotor and stator must be very small in order for the best power factor to be obtained. The shaft must, therefore, be very rigid and be furnished with the highest grade of bearings, being ususally of the sleeve or ball-bearing type. A cutaway view of a typical squirrel-cage induction motor is shown in Figure3,below :

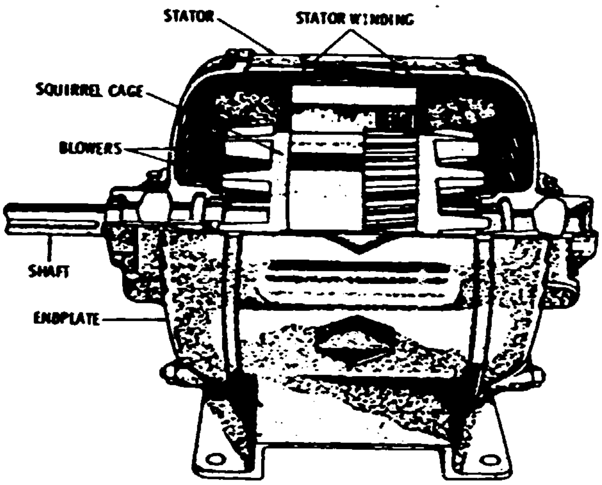

Cutaway view of a typical squirrel-cage induction motor.

3.4 Winding of insertion coils & forming

The following are the main features in the design and forming of coils:

a. Continuous adjustment of the winding speed or division of the speed range into as many steps as possible inorder to suit the winding speed to the coil-size and wire diameter.

b. Provision for smooth staring, to avoid excessive stretching or breaking of the wire.

c. An attached counter-mechanism for counting the number of winding with a provision for automatic cut-out when a pre-determined number is reached, with simultaneous locking so that re-starting of the machine is possible only when the counter has been reset to zero.

d. Brake for rapid stopping of the machine.

e. Suitable wire take-off system for supplying one or several wires.

The picture in Fig. 4, shows a small table machine setup for winding insertion coils.

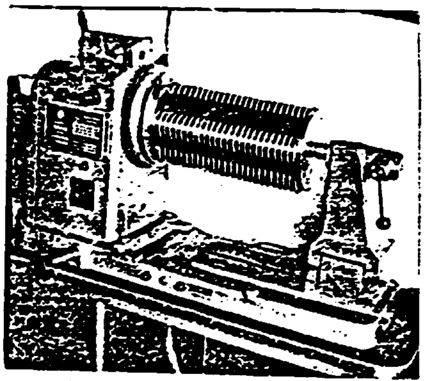

Fig. 4

This machine is equipped with coilers for winding oval coils of equal size. For instance, 2 coils are to be wound one after the other, some support for the coiler would be necessary at the tailstock end. The winding bolts carrying the coilers are tapered at their ends, and the connecting plate which takes the bolt-ends has conical holes.

The tailstock can be tilted forward, so that the coilers and the wound coils can easily be removed from the winding bolts. There are thus no screws of any kind to be undone during this winding job, due to which working time is reduced to a minumum, see Fig. 5.

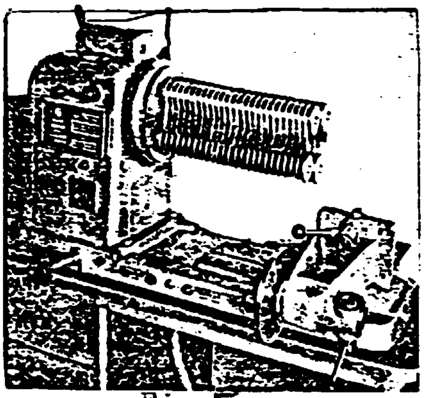

Fig.5

Switching on and off is accomplished by means of a foot pedal so that the operator has both hands free for wire-guiding and winding.

3.5 Binding of coil sets

There are four different methods of binding the coil sets-

1. Binding with wire, string or tape. This is the old method still used in very many winding shops.

2. The holding together of the coils by means of clips. Many different types of clips have been developed, in steel wire, steel strip or even plastic - none of them have as yet achieved much popularity. These clips are usually found to be a nuisance when the coils are being inserted into the stators.

3. Binding the coils with adhesive tape. One either binds each coil individually in two places with a piece of adhesive tape, or else one uses the following process. The

coil former is made with very wide flangers, which have a slot of approximately 20 mm. width cut into them. In this slot a strip of adhesive tape is laid with the adhesive side uppermost. The coils are thus wound onto the adhesive surface. When the coils have been wound, a second strip of adhesive tape is laid lengthwise over the coils with its adhesive surface downwards. The two adhesive surface are then pressed together in the cut-out flange slots. When the set of coils is removed from the former the coils are seperated with scissors. This process is very rapid, but the removal of the adhesive tape before insertion is time-consuming. None of the three methods is completely satisfactory and the search continuous for something better.

4. The method of welding strips of polythene into the flange of the winding former is already in use. One strip is put on before winding, and the second strip welded on to the lower one when the coils have been wound.A problem here, however, is the cooling necessary (for example air-cooling) to avoid damage to the insulation. A considerable proportion of the total winding time of a stator is taken up in making the connections, particularly in double-layer winding. In addition the requisite number of coloured sleeves are drawn over the wire at the beginning of the winding process- these then serve as insulation at cross-over points. With this method ten to fifteen minutes of connecting time can easily be saved after proper training of personnel.

3.6 Insulation and insulting the slots

The quality of the enamelled wire is a decisive factor for the life of a motor winding. Part of the insulation of practically all electrical machinery is in the form of organic compounds which contain water as an integral part of their chemical make-up. The insulation used in electric machinery does not last forever. It gradually deteriorates, slowly at low temperatures and more rapidly at higher temperatures.

Classification of Insulation. Electrical insulation is classified by the temperature stability of the material use in its construction. The four major classification are listed below:

Class O insulation consists of organic materials such as cotton, silk, or paper, not immersed in a liquid dielectric such as insulating varnish. Class A insulation consists of organic materials such as cotton, silk or paper, impregnated with a liquid dielectric such as varnish or enamel.

Class B insulation consists of inorganic materials such as mica, Fiber-glass, or asbestos, held together with an organic binder.

Class H insulation consists of inorganic material such as mica, Fiber-glas, or asbestos, held together with a silicone substance as a binder.

Hottest Allowable Temperature for Electrical Insulation (°C)

Class O..............90
Class A.............105
Class B.............130
Class H.............200

The output rating are based on continuous duty as defined in various Standards and at an ambient temperature of 40°C with a maximum temperature rise of 80° C as permitted for Class 'B' insulation, 75°C in case of Class 'E' insulation and 100° C in case of Class 'F' insulation by the resistance method of measurement and at altitudes up to 1000m above mean sea level. It is usual nowadays, to insulate the slots with presspan, hotstaphanfoil, or a combination of the two. The slot-folding machine cuts the insulaitons to measure from a roll and creases them - at the same time the ends are crimped for extra strength. The inter-coil insulation and the slot closures can similarly be shaped.

3.7 A Typical Example of a Direct-Current (DC) Motor showing methods of winding with figures and sketches.

A d-c motor is a machine which, when supplied wiht electric current, can be used for such mechanical work as driving pumps, running machine tools, and so on. Direct-current motors are also widely used in applications that require control of speed. Some of these are printing presses, electric trains, elevators, and drives. Direct-current motors are made in sizes varying from 1/100 h.p. to thousands of horsepower. A typical d-c motor is shown in Figure 1 Appendix no. 3, All figures mentioned below can be seen under Appendix no. 3.

Construction

The main parts of the d-c motor are the armature, field poles and frame, end plates or brackets, and brush rigging. The armature is the rotating part of the motor and consists of a laminated steel core with slots in which coils of wire are placed. The core is pressed on a steel shaft that also holds the commutator. This latter conducts current form carbon brushes to the coils in the slots. Figure 2 shows an armature with straight slots, and Figure 3 shows skewed slots.

The frame of the d-c motor is made of steel or cast iron, generally circular in form and machined so that the field pole can be mounted inside it, as shown in Figure 4. Many motors are also made with a laminated steel frame. The field pole is usually fastened inside the frame with screws or bolts, but on some small motors the field poles are part of the frame. On large motors, the poles are laminated as shown in Figure 5 and bolted to the frame. The field pole holds the field coils or windings. These consist of coils of insulated wire that are taped before being placed on the field pole.

Two end plates, fastened to the frame with bolts, bear the weight of the armature and keep it equidistant from the pole pieces (see Figure 6). The end plates contain the bearings in which the shaft of the armature revolves. These may be either sleeve bearings, as shown in Figures 7 and 8, or ball bearings, as shown in Figure 9.

On all d-c motors, current must be conducted to the armature winding. This is accomplished by connecting leads from the winding to the commutator can be supplied with current by allowing carbon brushes to ride on it and contact it while it is turning. The brushes are held in a stationary position by brush holders, which are generally mounted on the brush rigging shown in Figure 10. The rigging is usually mounted on front plate and so constructed that the brush position may be changed. On small motors, the brush holders are usually cast as part of the plate. The brush holders on all motors are insulated from the end plate to prevent grounds and to prevent short-circuiting the brushes. There are three types of d-c motors: the series motor, the shunt motor, and the compound motor. These types are alike externally. They differ in the construction of the field coils and in the connections between the field coils and the armature. The series motor contains field coils composed of a few turns of wire connected in series with the armature as shown in Figure 11. This motor has high starting torque and a varible-speed characteristic. The greater the load the lower the speed. The series motor is generally used in cranes, winches, trains, and so on.

The d-c shunt motor contains a field composed of many turns of wire. This is connected in parallel with the armature, as shown in Figure 12. The motor has medium torque and constant-speed characteristic and is used on applications that require constant speed, such as drill presses, lathes, and so on. Shunt motors may have a light series field added and are called stabilized shunt motors. A stabilized shunt motor is a d-c motor in which the shunt field is connected in parallel with the armature circuit and which also has a light series field added to prevent a rise in speed or to obtain a slight reduction in speed with increase in load. These motors are connected like a compound motor.

In the compound d-c motor shown in Figure 13, each field coil is a combination of the series and shunt fields and is made in two sections. One section (series field) is connected in series with the armature, and the other section (shunt field) is connected in the shunt circuit. This motor combines the characteristics of the series and the shunt motor.

The construction of the form is given in Figure-14(a). Other winding details are shown in Figures-15 to 23. To be brief connecting field poles are shown in Figures-24 to 28. Series motors see Figure-29. Shunt motor see Figure-30. For compound motors see Figures-31 to 35. Interpole type see Figures-36 to 42. Reversing DC-Motors see Figures-43 to 49. For troubleshooting and repair of DC motors see Figures-50 to 71.

4. Maintenance

Maintenance can be classified into preventive maintenance and break down maintenance.

Preventive maintenance is generally done when the plant is in running condition to prevent anticipated break-down by lubricating, fixing of bolts and nuts, aligning etc. The break down maintenance is generally on a "given emergency - apply remedy basis". The result will be inconvenience, loss of time and repairs that would be more expensive than the cost of keeping the equipment in a satisfactory running condition.

Preventive maintenance programme would result in -

1. Reduction of emergency break down.
2. Reduction of loss of production due to shutting down of equipment for repairs.
3. Reduction in rate of depreciation.
4. Spreading of maintenance cost more evenly over in any accounting period.

In other words the advantage of preventive maintenance can be summarised as follows: -

1. The non-productive time is known exactly.
2. Warning is given to production planning departments regarding the condition and wear of the machine parts.
3. Spares can be ordered in advance and fitted to the machines at a tie most convenient to the production programme. (Often this can coincide when the job change occurs or at the time of tood down).
4. The possibility of break down in the middle of production run is greatly reduced.

5. Standardisation

For the planning of an electrical motor manufacturing unit an understanding of the pertinent specifications and standard is an activity on whch the country's economy depends. To industry standardization provides savings through mass production, production of series of motors, and reduction of time and materials through standard frame sizes/designs, equipment, procedures and testing.

The standardisation of fixing dimensions, flange dimensions, shaft height, diameter and length would facilitate in:

a) Interchangeability and easy replacement of standard motors.

b) Reduction in stock of spare parts.

6. Conclusion

Electric motors play a very important part in furnishing power for all types of domestic and industrial applications. This short report gives a fundamental, basic, idea of various types of electric motors and out of several, only one example of a DC Motor has been taken, to show how winding of electric motors can be done.

It is presumed that this report will be in some way assistance to both technical and non-technical persons to gain Knowledge of the electrical motors.

7. Recommendations

Depending on the requirement of a particular developing country, it is recommended to prepare, in due course, two separate reports on the following subjects:

1. A 'Guide' or a 'Manual' - showing a list of 'Trouble Shooting' in Electric Motors and Remedy Against Trouble and Possible Cause with (a) maintenance guide and (b) many qustions and answers to solve various problems pertaining with daily loss of production due to failure of electric motors.

2. Manufacturing of Electric Motors

   (This shall contain:

   - Layout diagrams and drawing of a proposed factory
   - single-line diagrams
   - flow diagrams of manufacturing process in detail.
   - market study
   - Infrastructure
   - Demand and Supply situation
   - Land and Building
   - Basic Raw material
   - Manpower
   - Machinery, plant and Equipment
   - Spare parts
   - Tools required
   - Details of each manufacturing shop and it's systematic process
   - Maintenance
   - Standardisation
   - Procurement and Sales
   - Cost Analysis
   - Profitability
   - Financial Resources
   - Instalments and Interest payable
   - A list of electrical machinery manufacturer plus other possible data and information available).

Appendix No. 1

A List of Electrical Motor Manufacturers who responded to our enquiry

File No. 1

1. Leopard Pfeiffer, Austria
2. Berger Lahr, Austria
3. Mannesmann Demag Foerdertechnik, West Germany
4. Loescher, Austria
5. Austria Antriebstechnik, G. Bauknecht, Austria
6. Siemens AG, Austria and West Germany

File No. 2

7. Brandstetter GmbH, Austria
8. Baumueller Nuernberg GmbH, West Germany

File No. 3

9. Frank & Dvorak, Austria
10. Agency for International Development, U.S.A.
11. GEC - Electromotors Ltd., England
12. Meyer Electromotorenfabrik, West Germany
13. Batliboi & Co. Ltd., India
14. Kemmerich Electrotechnik, West Germany

File No. 4

15. Felten & Guileaume Co., West Germany
16. Georgii Kobold, Austria and West Germany

File No. 5

17. ABB - Asea Brown Boveri, Switzerland and West Germany

APPENDIX No.2

DIFFERENT TYPES OF ELECTRIC MOTORS

□ CRANE DUTY MOTORS

Cage Rotor

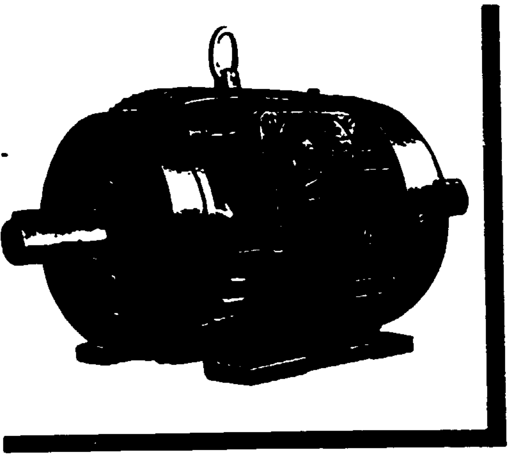

Type	KH/LD.
Ratings	0.55 kW to 20 kW at 1000 rpm.
Voltages	Upto 650 V.
Speeds	1000 rpm and below.
Frame sizes	80 to 200.
Mounting	Foot.

Wound Rotor

Type	CDW.
Ratings	3 kW to 250 kW at 1000 rpm.
Voltages	Upto 650 V.
Speeds	1000 rpm and below.
Frame sizes	132 to 400.
Mounting	Foot.

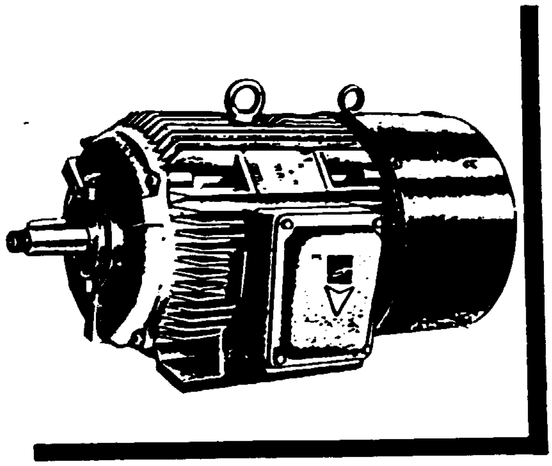

Induction Frequency Converter

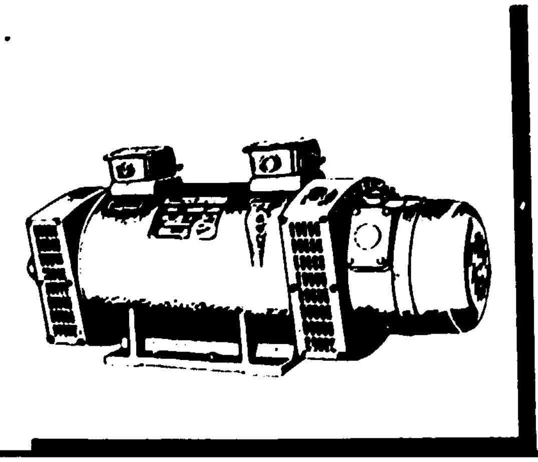

Type	FC.
Ratings	Upto 6.25 kVA.
Voltages	Upto 415 V.
Output	120 Hz to 194 Hz at 127 Volts.
Speeds	3000 rpm.
Frame sizes	180.
Mounting	Foot.

Appendix nr. 2
page 2.

Increased Safety and Non Sparking Motors

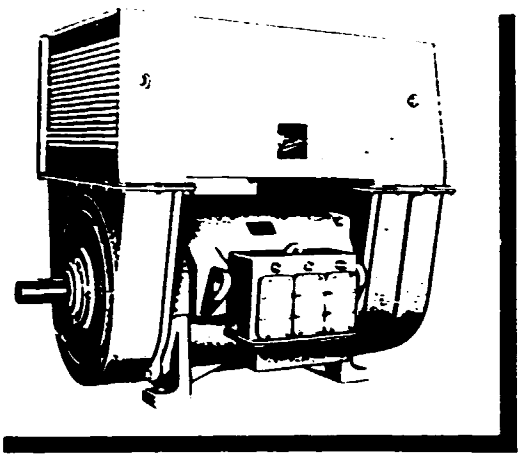

Type	eKH/eBVD/nBVD/eLD/KD/nLD/CD/MT
Ratings	0.12 kW to 3000 kW at 1500 rpm.
Voltages	Upto 6600 V.
Speeds	3000 rpm and below.
Frame sizes	63 to 1000.
Mounting	Foot or Flange.

☐ FLAME PROOF MOTORS

Cage Rotor

Type	LE/BLE.
Ratings	0.75 kW to 350 kW at 1500 rpm.
Voltages	Upto 6600 V.
Speeds	3000 rpm and below.
Frame sizes	80 to 450.
Mounting	Foot or Flange.

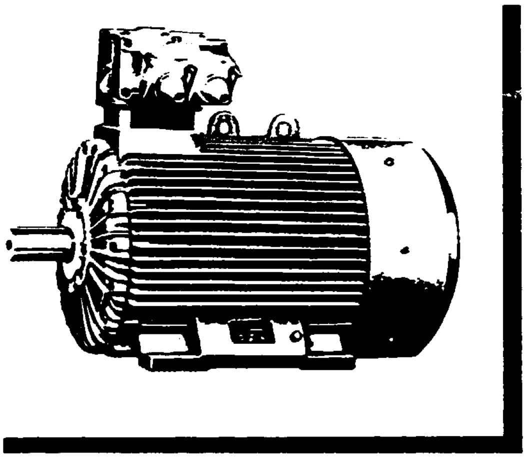

Wound Rotor

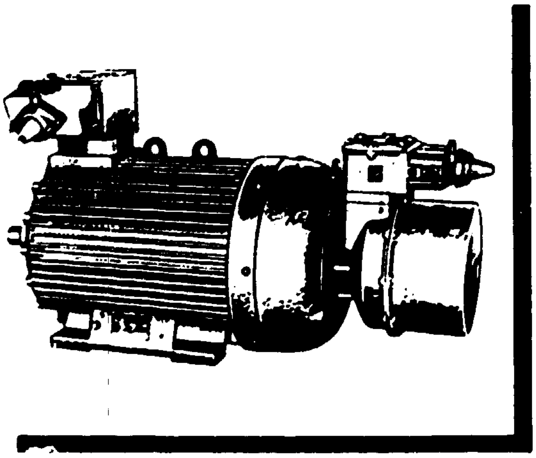

Type	LEW.
Ratings	30 kW to 125 kW at 1500 rpm.
Voltages	Upto 650 V.
Speeds	1500 rpm and below.
Frame sizes	225 to 315.
Mounting	Foot.

Appendix no. 2
page 3

RAKE MOTORS

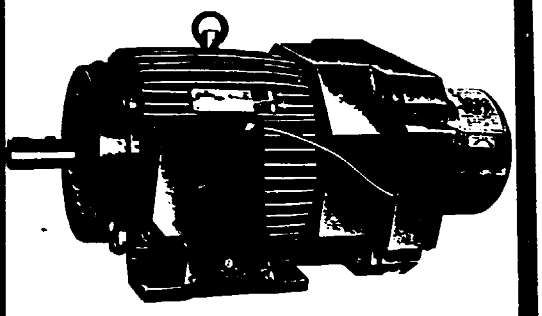

Type	KB/BKB.
Ratings	0.75 kW to 11 kW at 1500 rpm.
Voltages	Upto 650 V.
Speeds	1500 and 1000 rpm.
Frame sizes	90 to 160.
Enclosure	TEFC.
Mounting	Foot or Flange.

☐ VERTICAL HOLLOW SHAFT MOTORS

SPDP, Cage Rotor

ype	VH.
atings	9.3 kW to 260 kW at 1500 rpm
oltages	Upto 650 V.
peeds	3000 rpm and below.
rame sizes	160 to 315.
ounting	Vertical.

TEFC, Cage Rotor

Type	KV.
Ratings	3.7 kW to 7.5 kW at 1500 rpm.
Voltages	Upto 650 V.
Speeds	3000 rpm and below.
Frame sizes	132.
Mounting	Vertical.

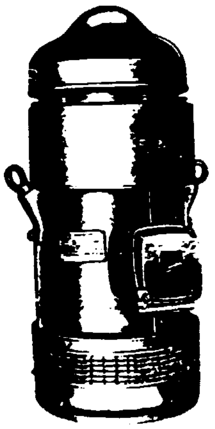

Pressurised Motors

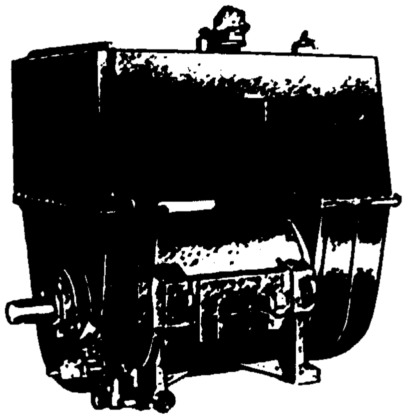

Type	KD/MT/MC.
Ratings	150 to 3000 kW at 1500 rpm.
Voltages	Upto 11000 V.
Speeds	3000 rpm and below.
Frame sizes	355 to 1000.
Mounting	Foot or Flange.

Appendix no. 2
page 4

☐ 'MC' SERIES MOTORS

Open/Closed Type, Cage Rotor

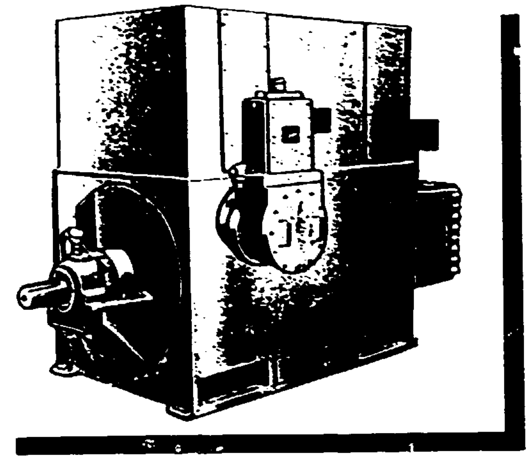

Type	MC.
Ratings	355 kW to 3000 kW at 1500 rpm.
Voltages	Upto 13800 V.
Speeds	3000 rpm and below.
Frame sizes	355 to 800.
Enclosure	SPDP or CACW.
Mounting	Foot or Flange.

SPECIAL MOTORS

☐ TEXTILE MOTORS

Type	KH/LD.
Ratings	5.5 kW to 30 kW at 1500 rpm.
Voltages	Upto 650 V.
Speeds	1500 and 1000 rpm.
Frame sizes	90 to 200.
Enclosures	TEFV.
Mounting	Foot.

Ring Frame Motors

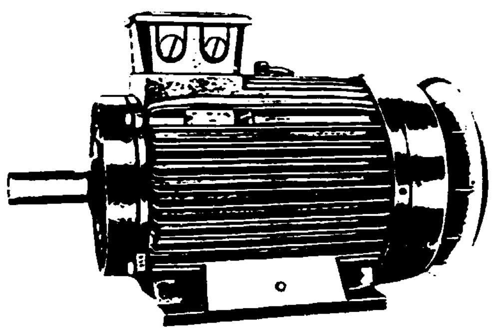

Looms, Ruti Looms and Card Motors

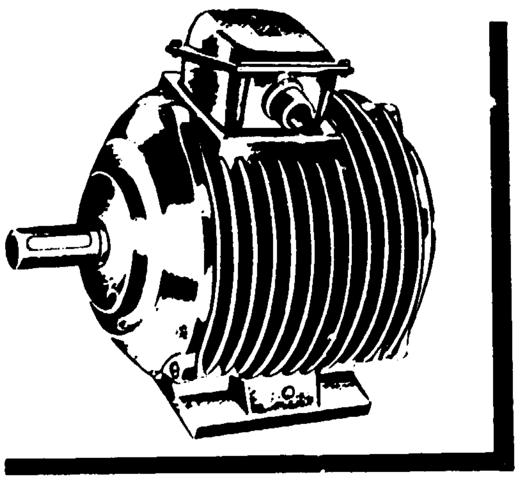

Type	RL/RLP/RC.
Ratings	0.55 to 2.2 kW to 1000 rpm.
Voltages	Upto 650 V.
Speeds	1000 and 750 rpm.
Frame sizes	100 to 132.
Enclosures	TESC.
Mounting	Foot, Pad or Cradle mounting.

Appendix no. 2
page 5

☐ 'PARICON' SERIES MOTORS

Closed Type, Cage/Wound Rotor

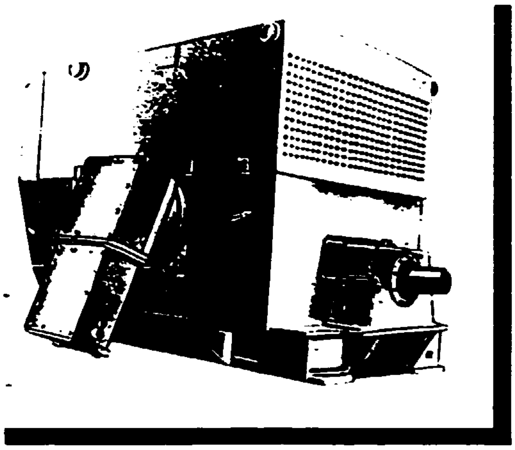

Type	T/L.
Ratings	355 kW to 3000 kW at 1500 rpm.
Voltages	Upto 138[illegible] V
Speeds	3000 rpm [illegible] below for cage, 1500 rpm and below for wound.
Frame sizes	355 to 710.
Enclosure	CACA or CACW.
Mounting	Horizontal or Vertical.

SPDP Type, Cage/Wound Rotor

Type	C.
Ratings	400 kW to 3000 kW at 1500 rpm.
Voltages	Upto 13800 V.
Speeds	3000 rpm and below for cage, 1500 rpm and below for wound.
Frame sizes	355 to 710.
Mounting	Horizontal or Vertical.

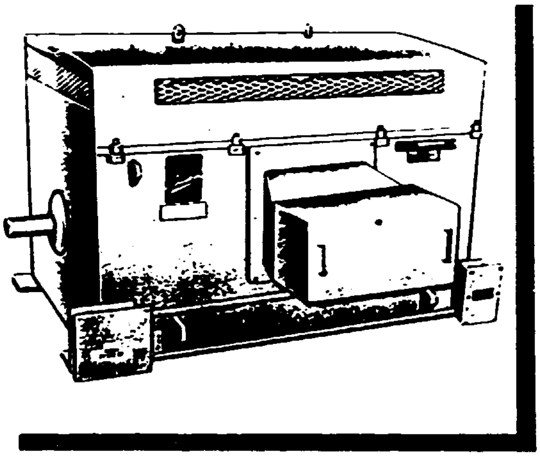

☐ 'MT' SERIES MOTORS

Closed Type, Cage/Wound Rotor

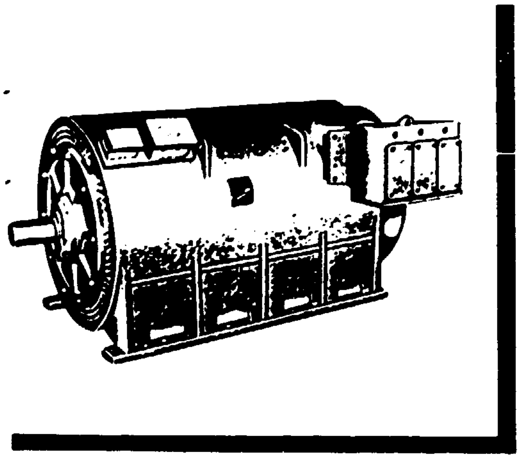

Type	MT.
Ratings	280 kW to 3000 kW at 1500 rpm.
Voltages	Upto 6600 V.
Speeds	3000 rpm and below for cage, 1500 rpm and below for wound.
Frame sizes	500 to 1000.
Enclosure	TETV.
Mounting	Foot or Flange.

Appendix nr. 2
page 6

Closed Type, Wound Rotor

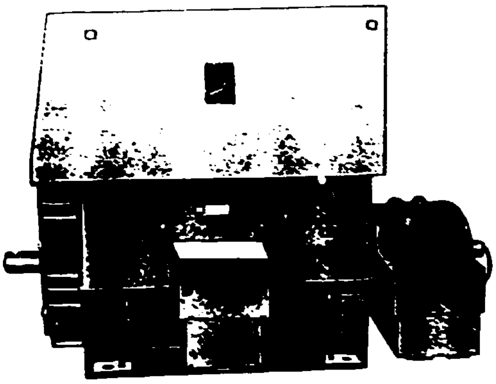

Type	CDW/CVDW.
Ratings	900 kW to 2250 kW at 1500 rpm.
Voltages	Upto 6600 V.
Speeds	1500 rpm and below.
Frame sizes	560 and 630.
Enclosure	CACA or CACW.
Mounting	Foot or Flange.

SPDP Type, Cage Rotor

Type	CC/CVC.
Ratings	1000 kW to 2800 kW at 1500 rpm.
Voltages	Upto 6600 V.
Speeds	1500 rpm and below.
Frame sizes	560 and 630.
Mounting	Foot or Flange.

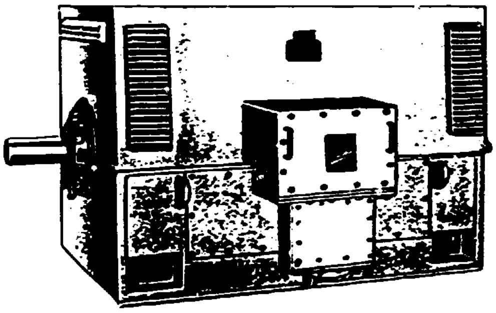

SPDP Type, Wound Rotor

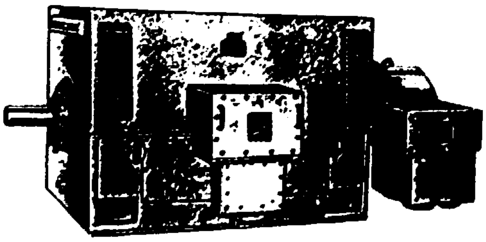

Type	CCW/CVCW.
Ratings	900 kW to 2500 kW at 1500 rpm.
Voltages	Upto 6600 V.
Speeds	1500 rpm and below.
Frame sizes	560 and 630.
Mounting	Foot or Flange.

Appendix no. 2
page 7

SPDP Type, Cage Rotor

Type	KC/KVC/KVCH.
Ratings	180 kW to 1250 kW at 1500 rpm.
Voltages	Upto 6600 V.
Speeds	3000 rpm and below.
Frame sizes	355 to 500.
Mounting	Foot, Flange or Flange with high thrust bearing.

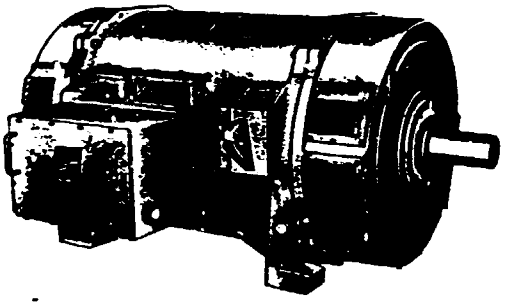

SPDP Type, Wound Rotor

Type	KCW/KVCW.
Ratings	180 kW to 1125 kW at 1500 rpm.
Voltages	Upto 6600 V.
Frame sizes	355 to 500.
Mounting	Foot or Flange.

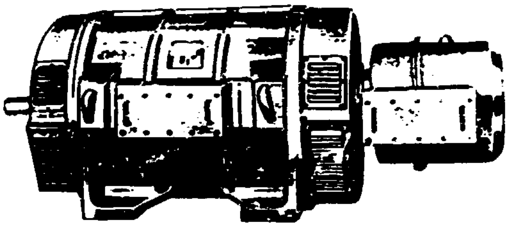

☐ 'COMPAK' SERIES MOTORS

Closed Type, Cage Rotor

Type	CD/CVD.
Ratings	1000 kW to 2500 kW at 1500 rpm.
Voltages	Upto 6600 V.
Speeds	1500 rpm and below.
Frame sizes	560 and 630.
Enclosure	CACA or CACW.
Mounting	Foot or Flange.

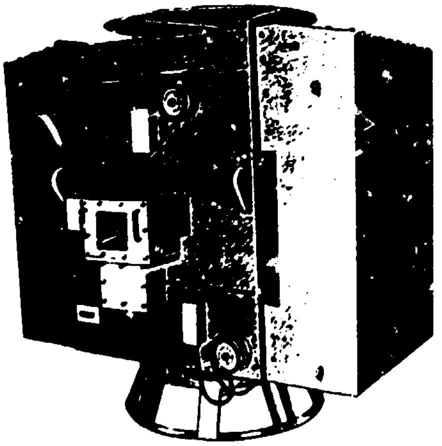

Appendix no. 2
page 8

TEFC, Wound Rotor

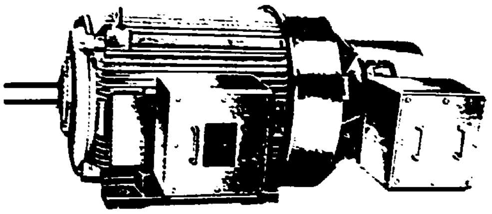

Type	LDW/BVDW.
Ratings	110 kW to 700 kW at 1500 rpm.
Voltages	Upto 6600 V.
Output speeds	1500 rpm and below.
Frame sizes	355 to 500.
Mounting	Foot or Flange.

☐ 'KILOPAK' SERIES MOTORS

Type	KD/KVD/KVDH.
Ratings	180 kW to 1000 kW at 1500 rpm.
Voltages	Upto 6600 V.
Speeds	3000 rpm and below.
Frame sizes	355 to 500.
Enclosures	CACA OR CACW.
Mounting	Foot, Flange or Flange with high thrust bearing.

Closed Type, Cage Rotor

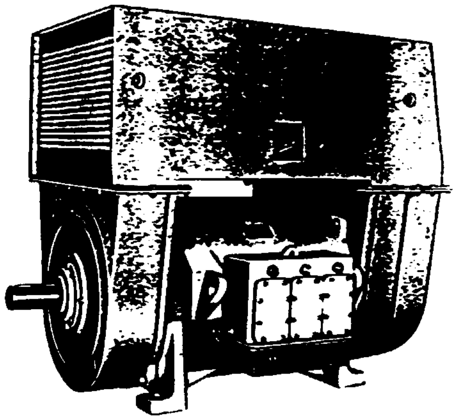

Closed Type, Wound Rotor

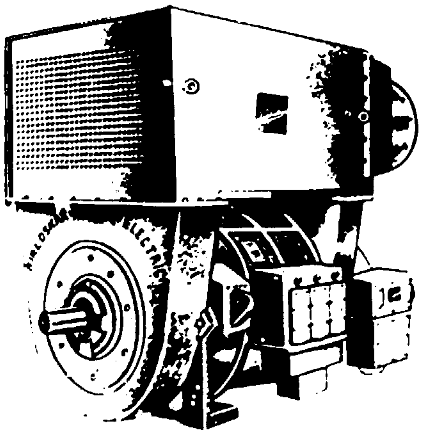

Type	KDW/KVDW.
Ratings	160 kW to 900 kW at 1500 rpm.
Voltages	Upto 6600 V.
Speeds	1500 rpm and below.
Frame sizes	355 to 500.
Enclosure	CACA OR CACW.
Mounting	Foot or Flange.

APPENDIX No. 3

Direct-current Motors

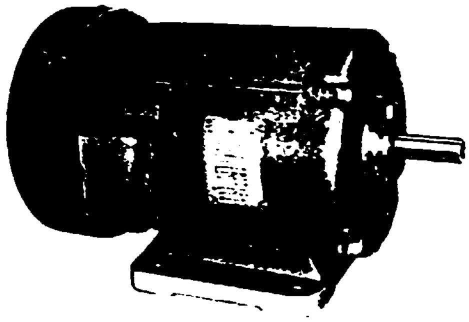

Fig. -1. A d-c motor.

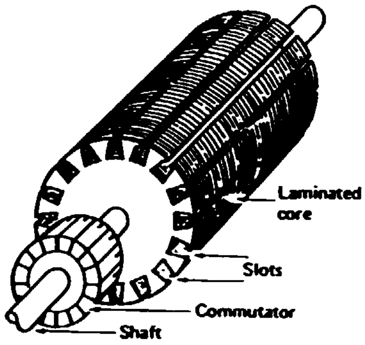

Fig. -2. The armature of a d-c motor before windings are inserted in slots.

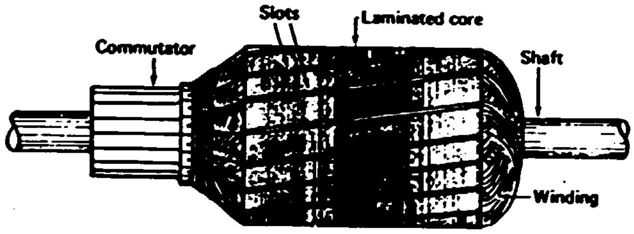

Fig. -3. The armature with skewed slots and windings in place.

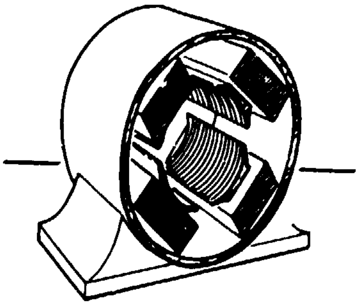

Fig. -4. A complete field assembly and frame of a d-c motor.

Appendix nr. 3
page 2

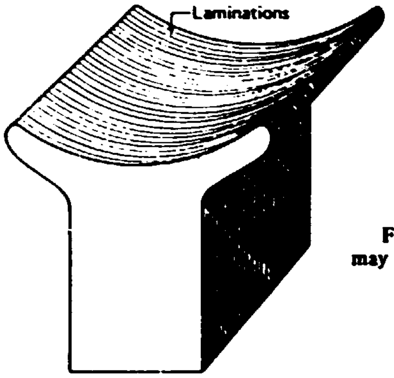

Fig. -5. A laminated field core. This may be bolted to the frame.

Fig. -6. An end plate of a d-c motor showing brush rigging.

Fig. -7. Construction of sleeve bearing and oil ring.

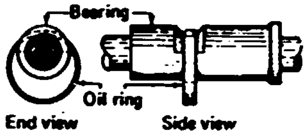

Sleeve bearing showing oil ring

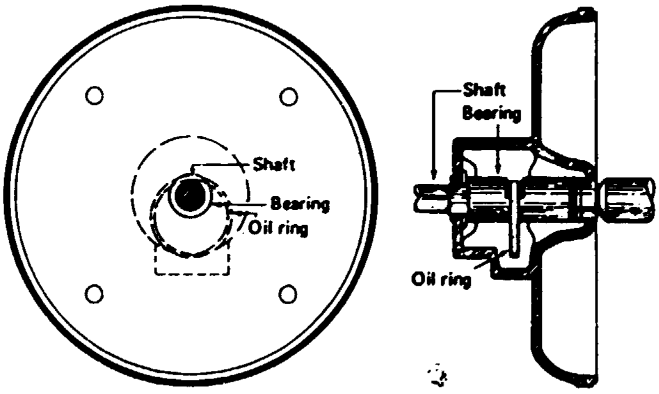

Fig. -8. A sleeve bearing assembled on an end plate.

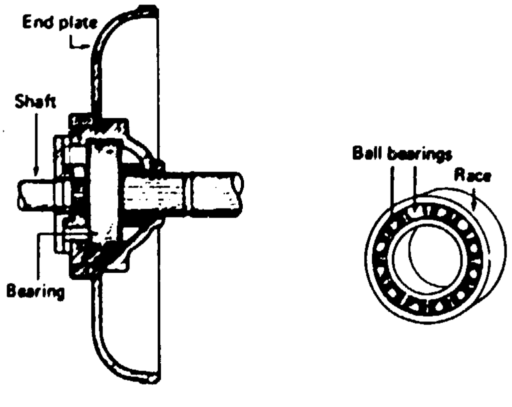

Fig. -9. The ball bearing at right mounted in the end plates as shown.

Appendix no.[illegible]
page 3

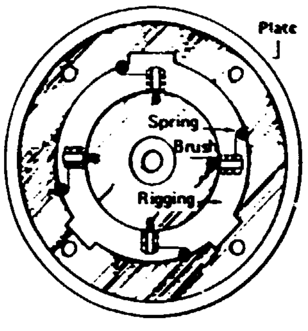

Fig. -10. The brush rigging attached to the end plate.

Fig. -11. The field and armature connection of a series motor.

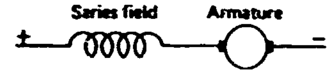

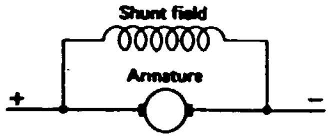

Fig. -12. The field and armature connection of a shunt motor.

Fig. -13. The field and armature connection of a compound motor.

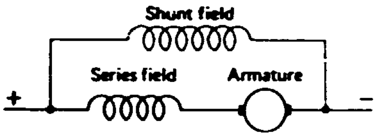

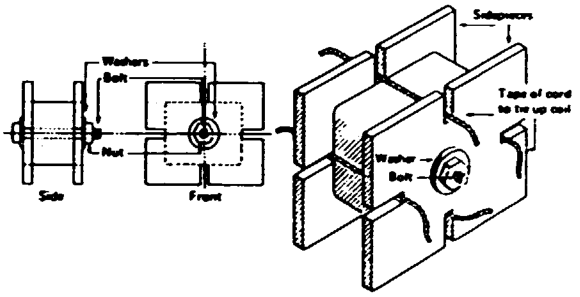

Fig. -14A. The construction of a form on which to wind d-c field coils.

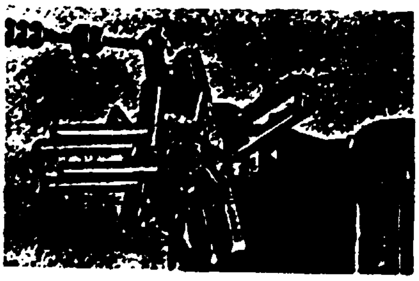

Fig. -14B. Coil winder head.
[illegible]

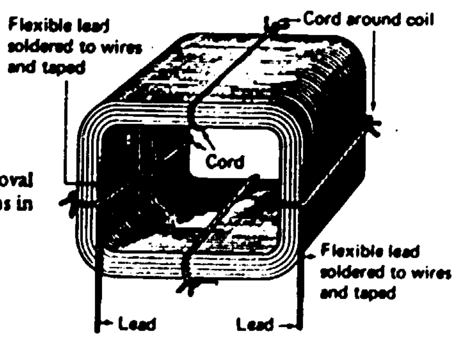

Fig. -15. A field coil after removal from form. The cord holds the turns in place.

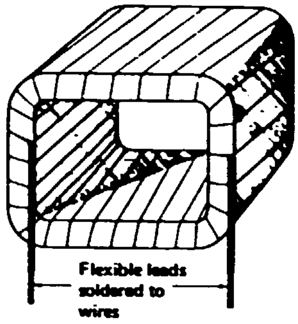

Fig. -16. A series-field coil is taped after flexible leads are soldered to the beginning and end of the coil. The coil is usually taped with a layer of varnished cambric and a layer of cotton tape.

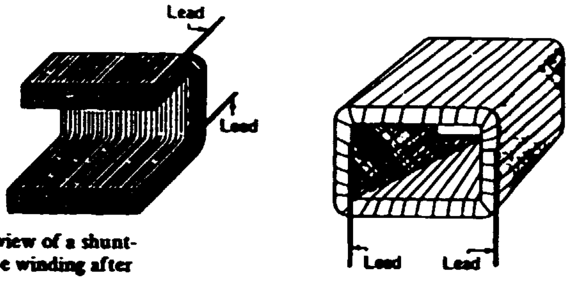

Fig. -17. A cutaway view of a shunt-field winding and the same winding after taping.

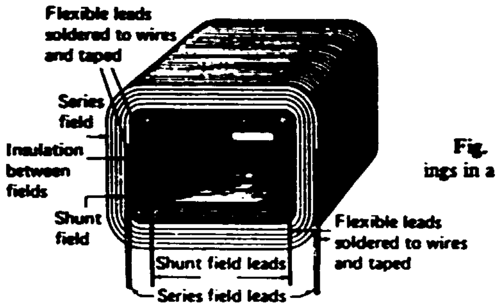

Fig. -18. The arrangement of windings in a compound field coil.

Fig. -19. A cutaway view of a compound-field coil.

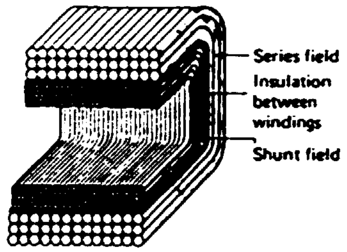

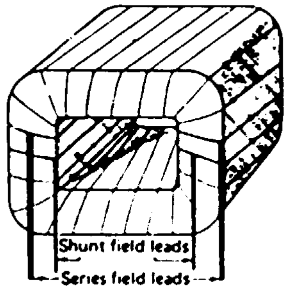

Fig. -20. A compound-field coil and its leads after taping.

Fig. -21. A field coil assembled on its core.

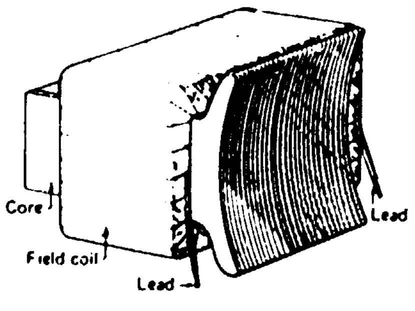

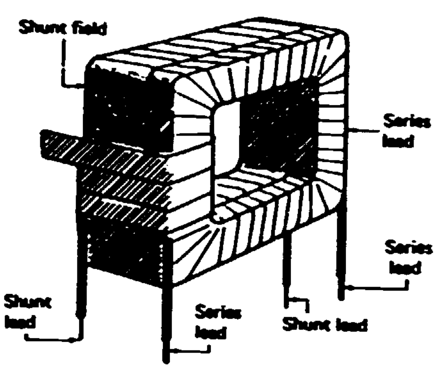

Fig. -22. A compound field for a large motor. The shunt and series fields are wound and taped separately, then placed side by side and taped again.

Fig. -23. An interpole field and its core.

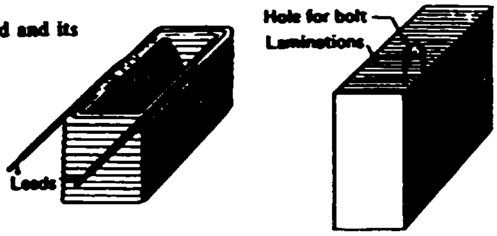

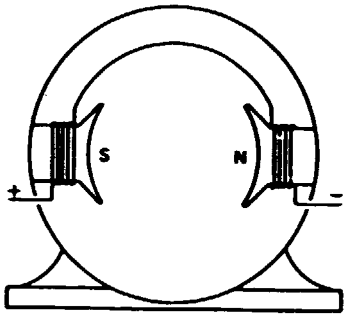

Fig. -24. In a two-pole motor, the fields are connected to form a north and south pole.

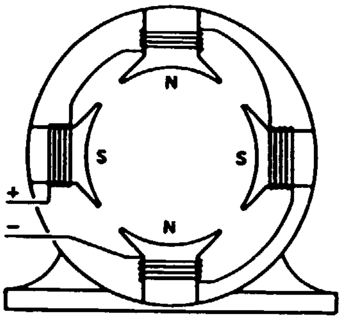

Fig. -25. North and south poles alternate in a four-pole motor.

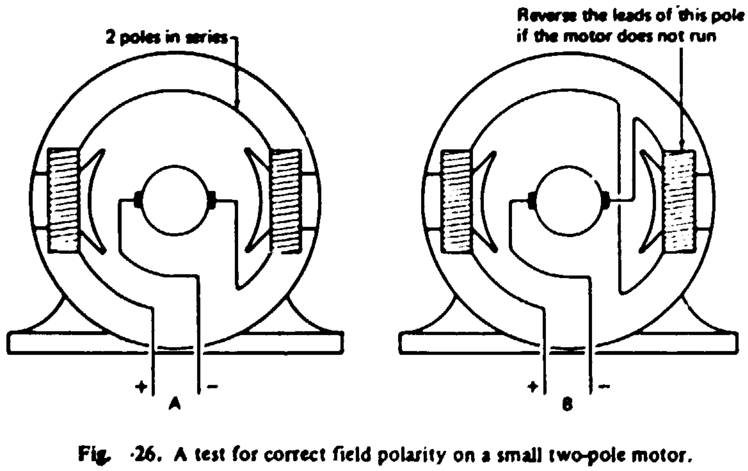

Fig. -26. A test for correct field polarity on a small two-pole motor.

Appendix no.
page 6

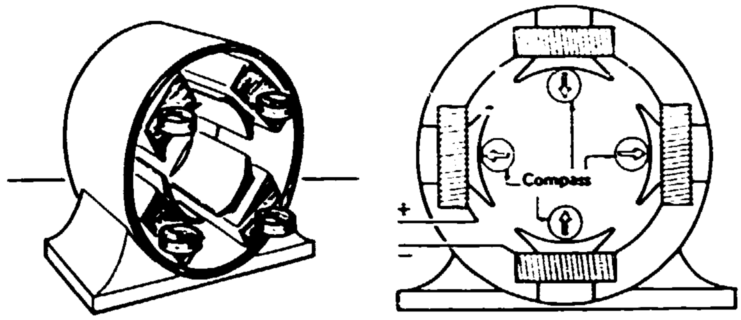

Fig. -27. On a four-pole motor, adjacent poles must have opposite polarity.

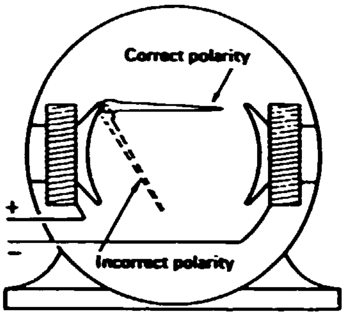

Fig. -28. Testing polarity of the field coils with a nail.

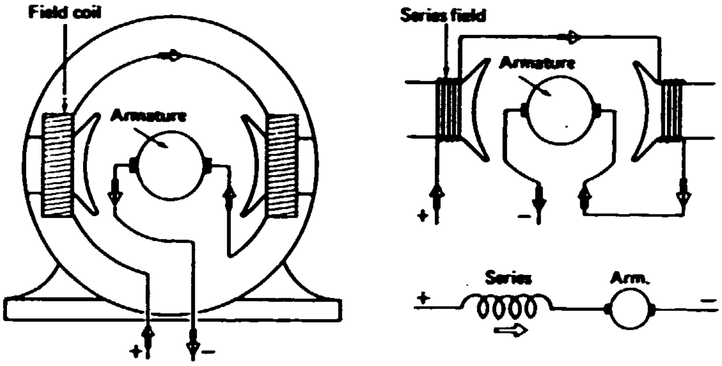

Fig. -29. Several methods of showing the connections of a two-pole series motor.

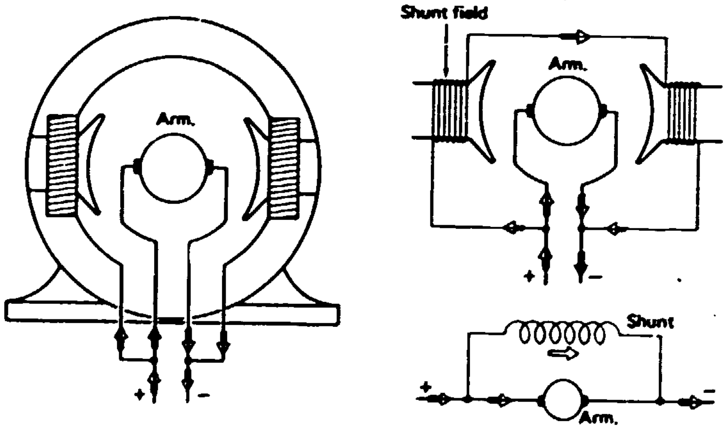

Fig. 30. Three methods of showing the connections of a two-pole shunt motor.

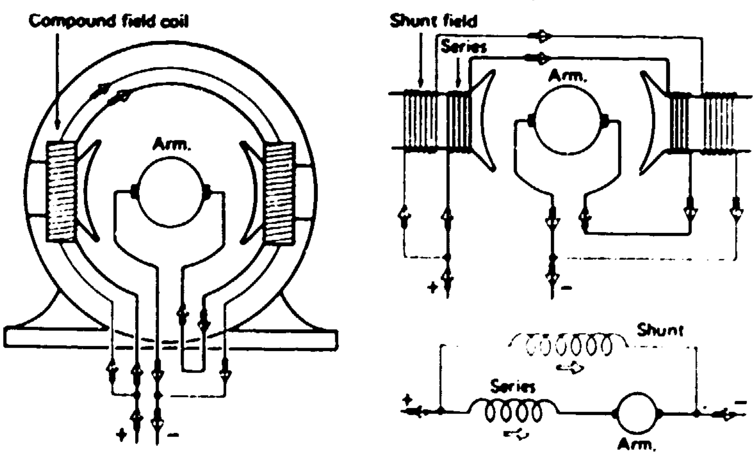

Fig. -31. Three methods of showing the connection of a two-pole compound motor.

Appendix no. 3
page 7

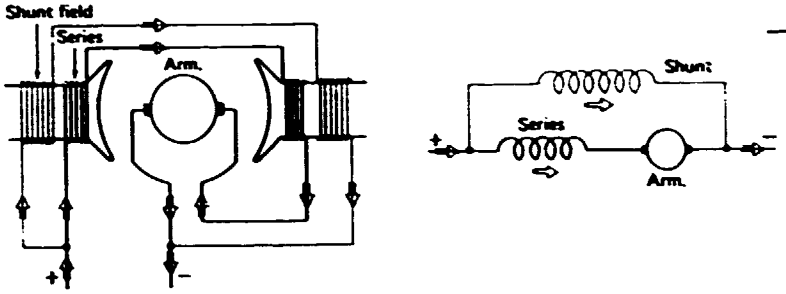

Fig. 32. A two-pole cumulatively compounded motor. If the current flow is in the same direction in both fields, it is called a *cumulative connection*.

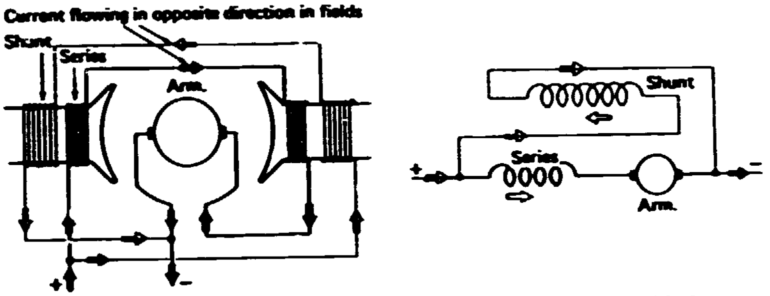

Fig. 33. A long-shunt, differentially connected compound motor with the current flow in opposite directions in the fields. When the shunt field is connected across the line, it is called a *long shunt*.

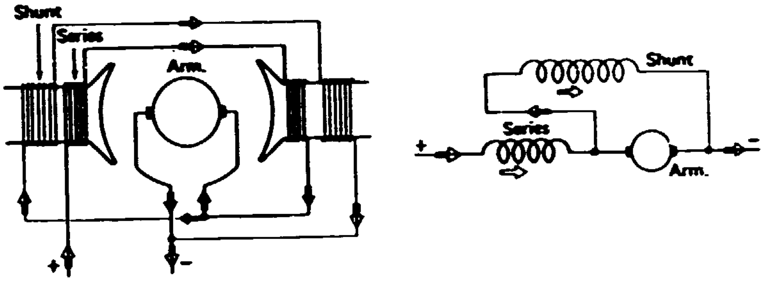

Fig. 34. A short-shunt cumulatively compound motor. The current in both the series and shunt fields flows in the same direction.

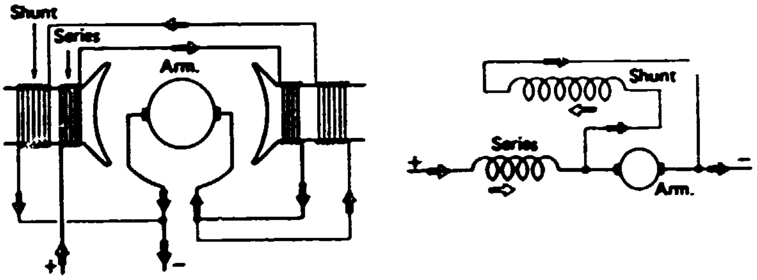

Fig. 35. A two-pole, short-shunt differentially compounded motor.

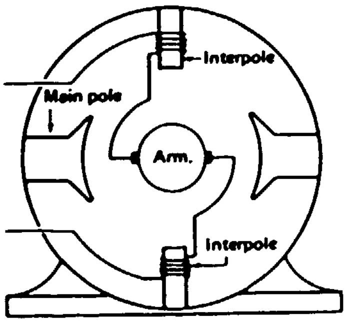

Fig. 36. Method of connecting the interpole in a two-pole motor.

Appendix no.3
page 8

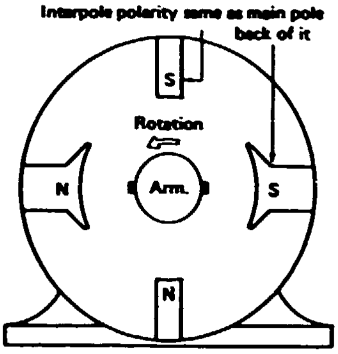

Fig. -37. The polarity of the interpole for counterclockwise (c.c.w.) rotation of a two-pole motor.

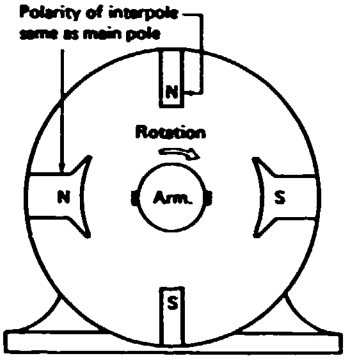

Fig. -38. The proper interpole polarity for clockwise (c.w.) rotation of a two-pole motor.

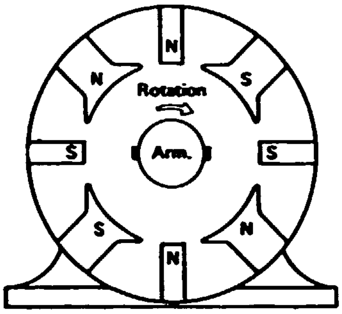

Fig. -39. The polarity of the interpole for clockwise (c.w.) rotation of a four-pole motor.

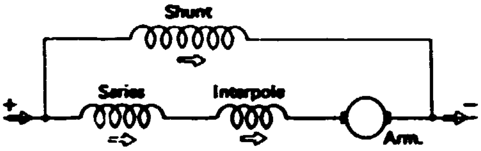

Fig. -40. A schematic diagram of a compound-interpole motor.

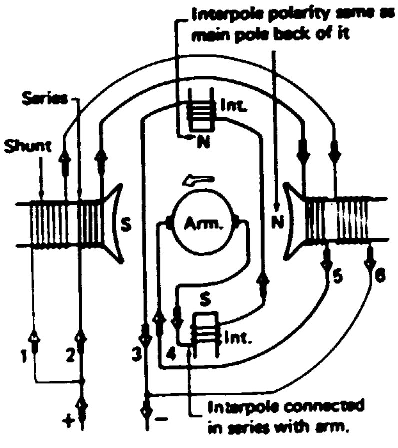

Fig. -41. A two-pole compound-interpole motor. With the polarity indicated, the motor will run counterclockwise.

Fig. -42. A two-pole compound-interpole motor using one interpole connected in series with the armature.

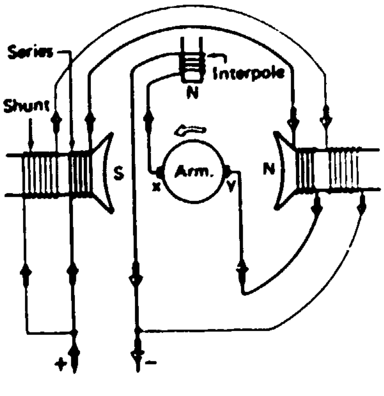

Appendix no. 3
page 9

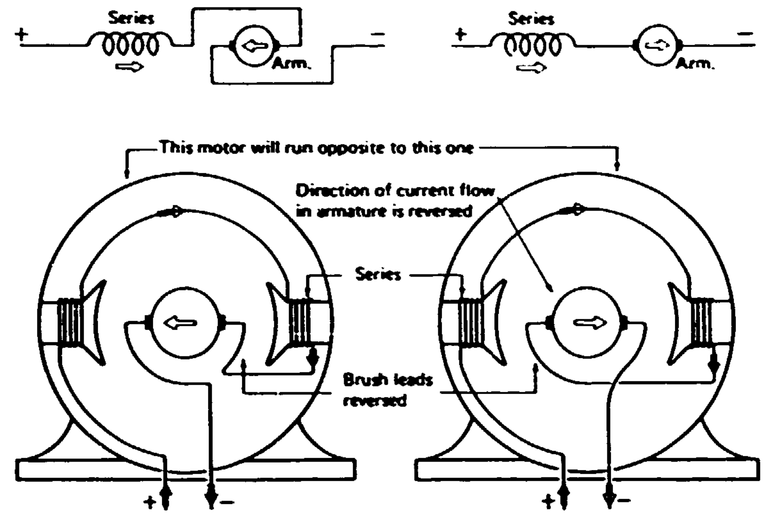

Fig. -43. The direction of rotation of a two-pole series motor changed by reversing the current flow in the armature.

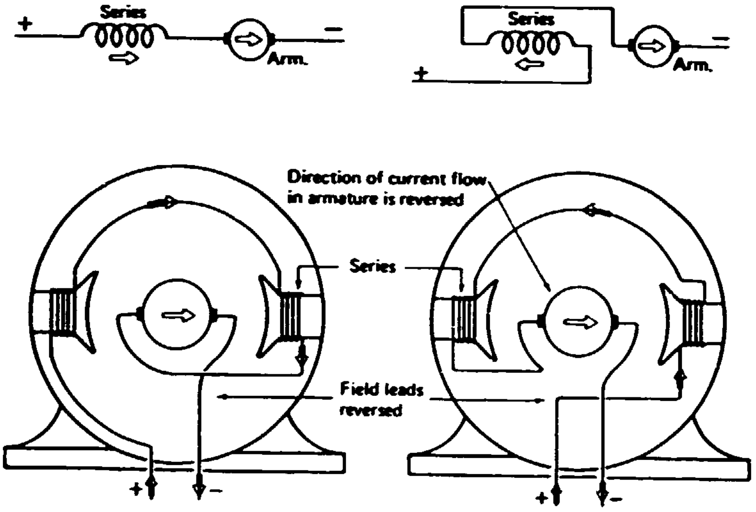

Fig. -44. The direction of rotation of a two-pole series motor changed by reversing the current flow in the field poles.

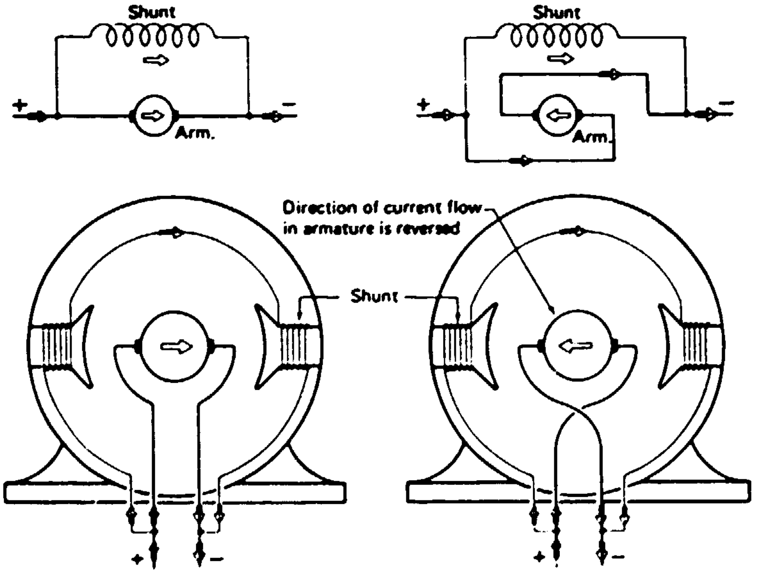

Fig. -45. A two-pole shunt motor reversed in the armature circuit.

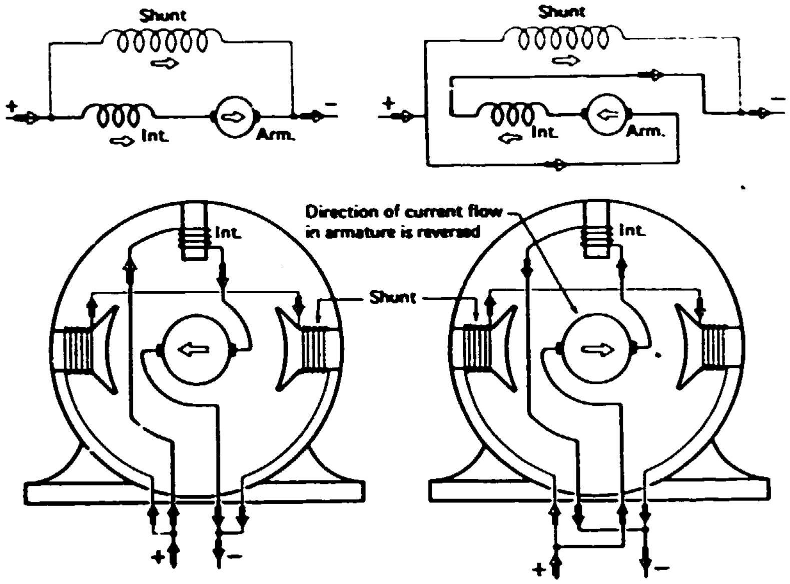

Fig. .-46. A two-pole shunt-interpole motor. The armature and interpole leads are reversed as a unit. The field polarity remains the same.

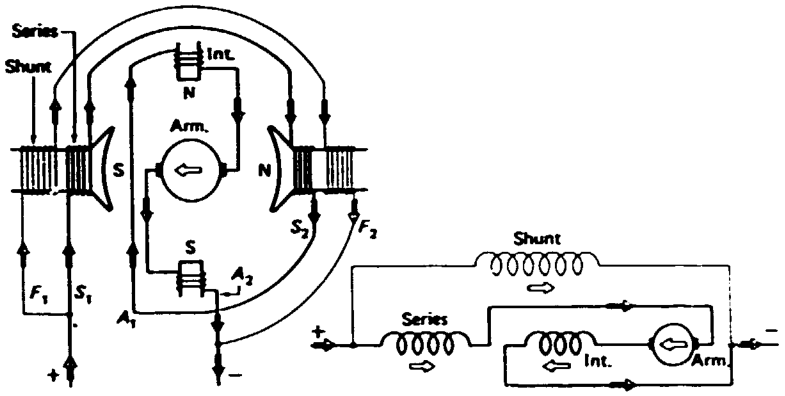

Fig. 7-48. A two-pole compound-interpole motor with the armature circuit reversed for opposite rotation from that of Fig. -47.

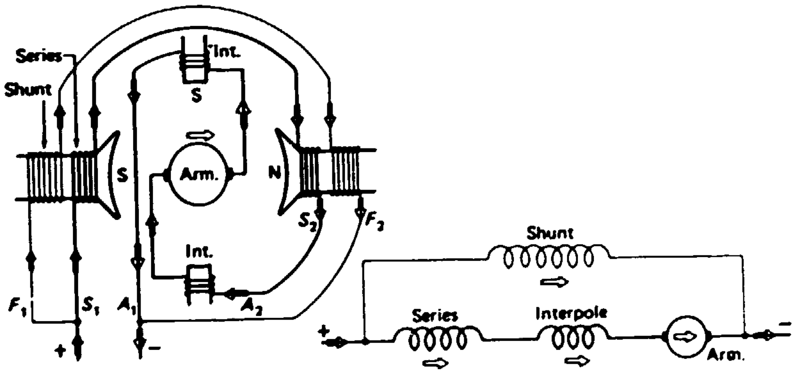

Fig. -47. A two-pole compound-interpole motor with six wires brought out of the motor. Wires F_1 and S_1 are sometimes connected together inside the motor, and one wire is brought outside.

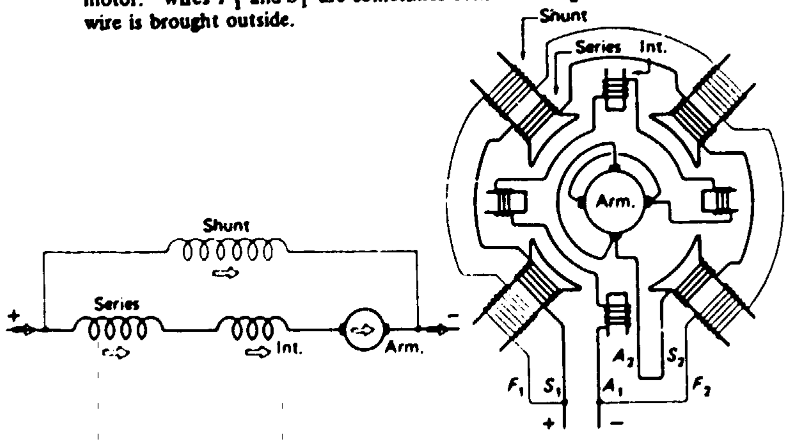

Fig. -49. A four-pole compound-interpole motor. To reverse, interchange leads A_1 and A_2.

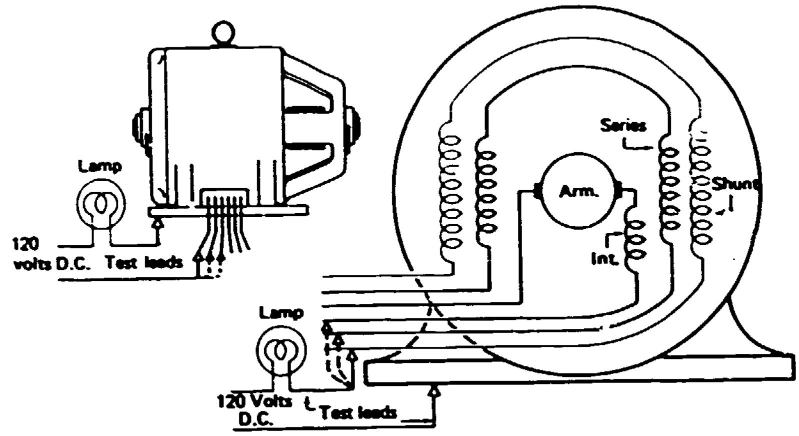

Fig. -50. Testing a compound motor for grounds.

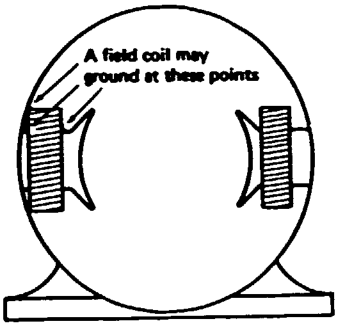

Fig. -51. The positions where the field most often grounds.

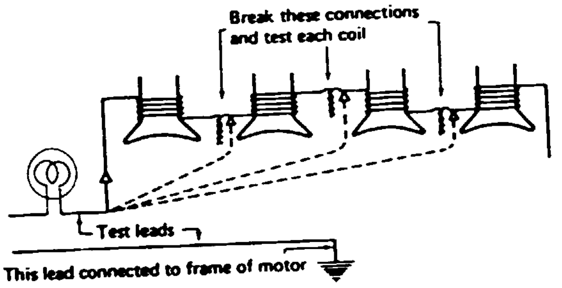

Fig. -52. To locate the grounded field coil, each coil is given a ground test.

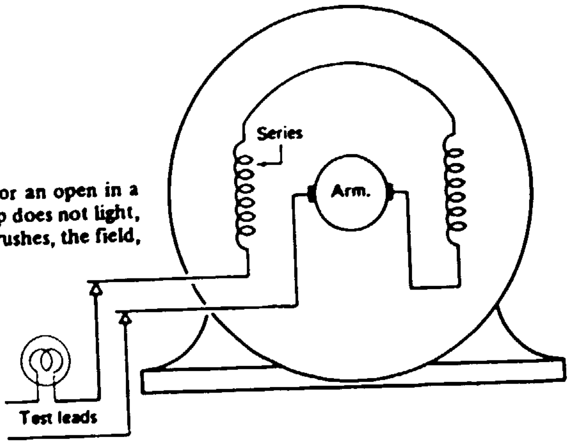

Fig. -53. The test for an open in a series motor. If the lamp does not light, the trouble may be the brushes, the field, or the connections.

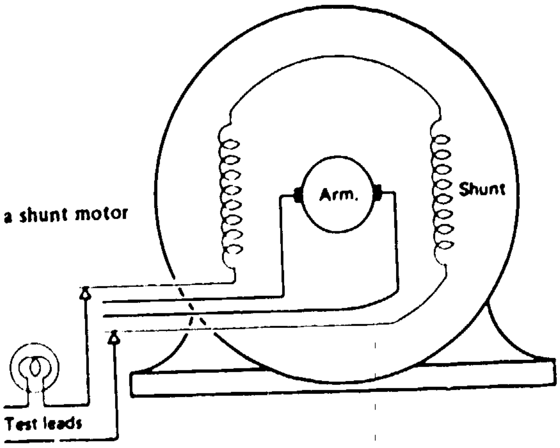

Fig. -54. The test of a shunt motor for opens.

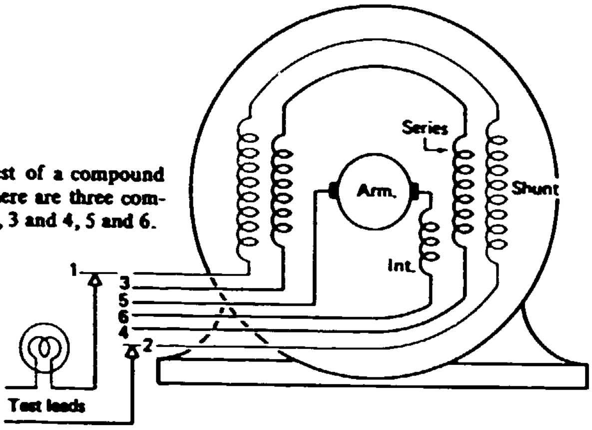

Fig. 55. The test of a compound motor for opens. There are three complete circuits: 1 and 2, 3 and 4, 5 and 6.

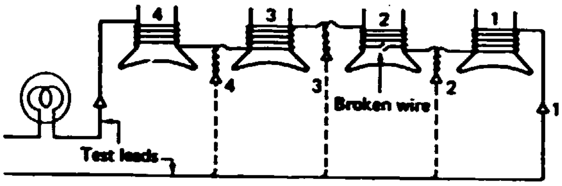

Fig. 56. The test for locating an open field coil in a four-pole motor.

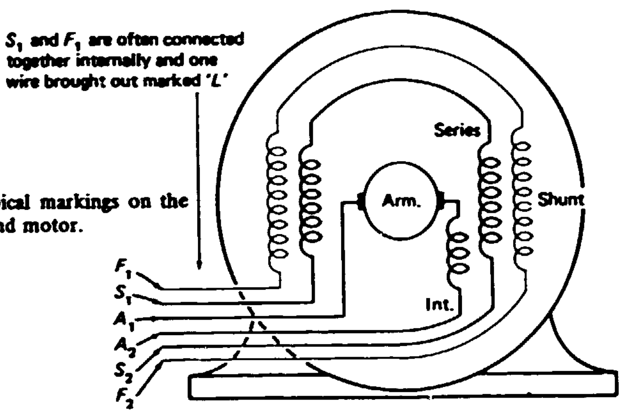

S_1 and F_1 are often connected together internally and one wire brought out marked 'L'

Fig. 57. Typical markings on the leads of a compound motor.

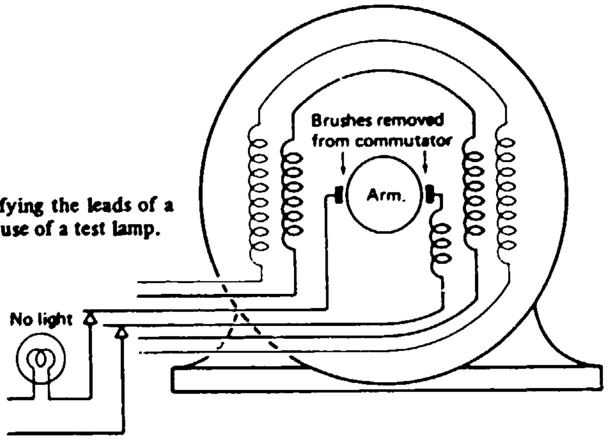

Fig. 58. Identifying the leads of a compound motor by use of a test lamp.

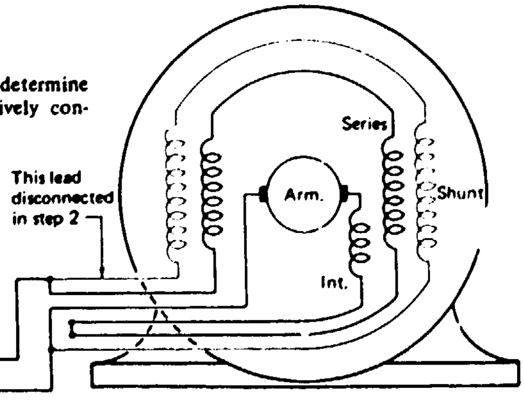

This lead disconnected in step 2

Fig. 59. The test to determine whether a motor is cumulatively connected.

Appendix no. 3
page 13

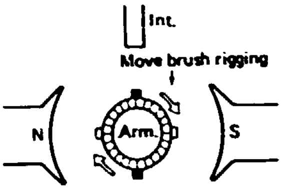

Fig. 60. The test for interpole polarity in a two-pole motor. All connections are removed except the armature and interpole. The brushes are shifted 90 degrees, and if the armature turns in the same direction in which the brushes were moved, the polarity is correct.

Fig. -61. The test for correct interpole polarity in a four-pole motor.

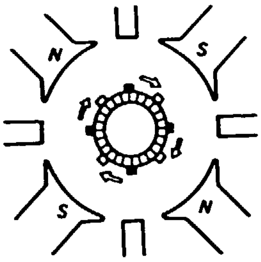

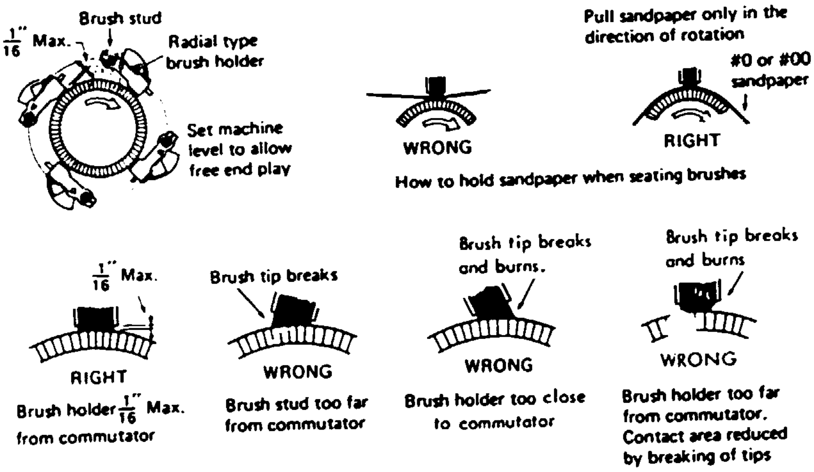

Fig. -62. The correct and incorrect positions of a carbon brush.

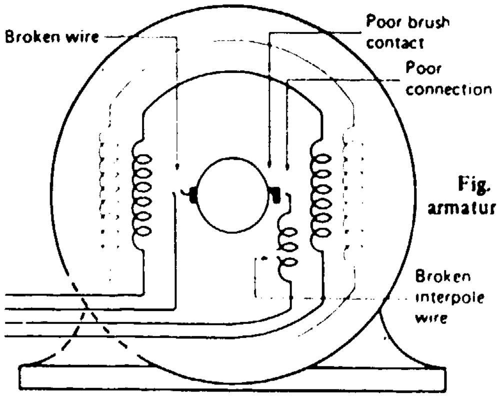

Fig. -63. Possible causes of an open armature circuit.

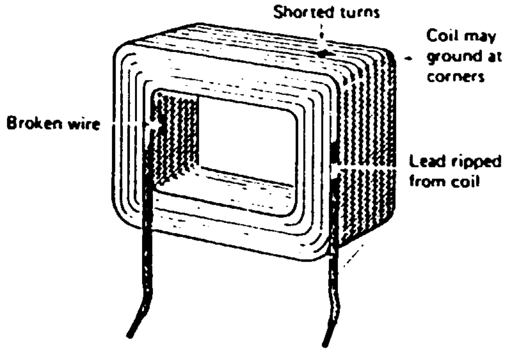

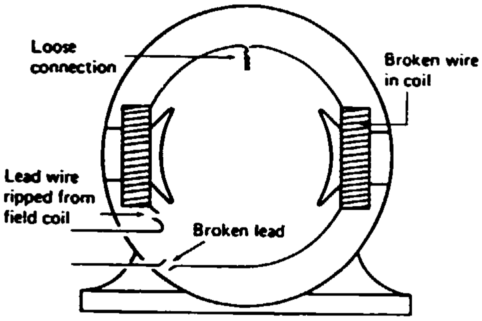

Fig. -64. Possible locations of opens in the field circuit and coil.

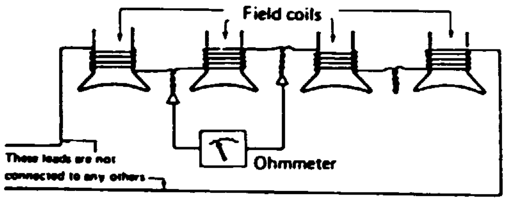

Fig. -65. The ohmmeter method of detecting a shorted coil.

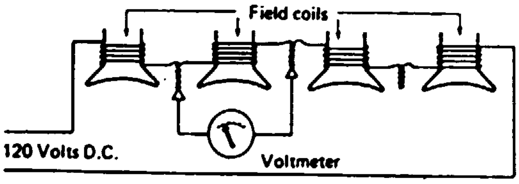

Fig. 66. The voltmeter method of locating a shorted coil.

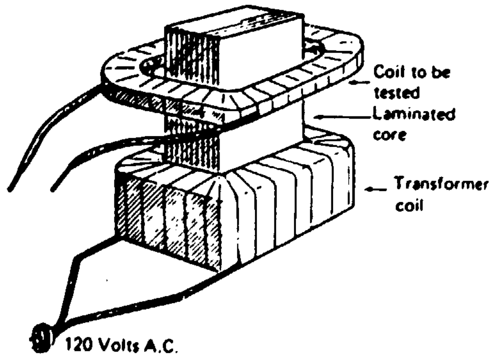

Fig. 67. A transformer used for testing shorted coils.

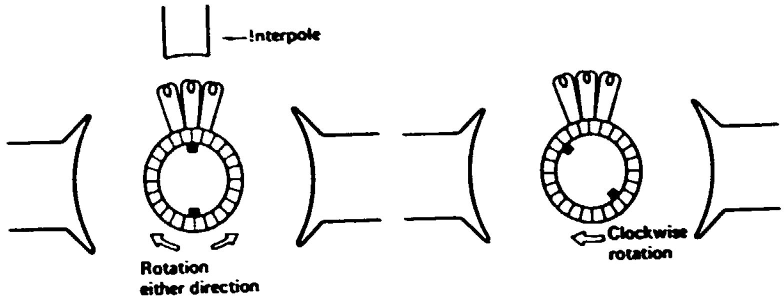

Fig. -68. The correct brush positions for interpole and noninterpole motors.

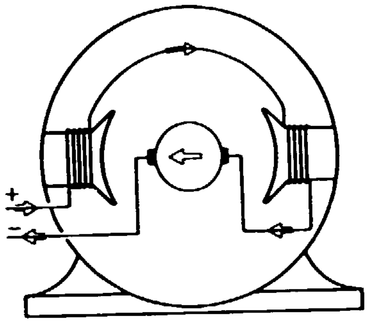

Fig. -69. The same amount of current flows through all elements of a series motor.

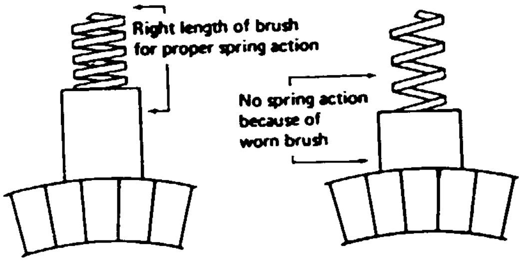

Fig. -70. Two diagrams showing the tension in the springs with brushes of different length.

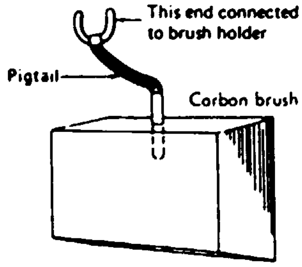

Fig. -71. A common type of pigtail brush.