OCCASION

This publication has been made available to the public on the occasion of the 50th anniversary of the United Nations Industrial Development Organisation.

DISCLAIMER

This document has been produced without formal United Nations editing. The designations employed and the presentation of the material in this document do not imply the expression of any opinion whatsoever on the part of the Secretariat of the United Nations Industrial Development Organization (UNIDO) concerning the legal status of any country, territory, city or area or of its authorities, or concerning the delimitation of its frontiers or boundaries, or its economic system or degree of development. Designations such as "developed", "industrialized" and "developing" are intended for statistical convenience and do not necessarily express a judgment about the stage reached by a particular country or area in the development process. Mention of firm names or commercial products does not constitute an endorsement by UNIDO.

FAIR USE POLICY

Any part of this publication may be quoted and referenced for educational and research purposes without additional permission from UNIDO. However, those who make use of quoting and referencing this publication are requested to follow the Fair Use Policy of giving due credit to UNIDO.

CONTACT

Please contact publications@unido.org for further information concerning UNIDO publications.

For more information about UNIDO, please visit us at www.unido.org

UNITED NATIONS INDUSTRIAL DEVELOPMENT ORGANIZATION
Vienna International Centre, P.O. Box 300, 1400 Vienna, Austria
Tel: (+43-1) 26026-0 · www.unido.org · unido@unido.org

15610

REPORT ON

COMPUTER REQUIREMENTS

FOR

OFFICE OF THE EASTERN SEABOARD

DEVELOPMENT COMMITTEE

NESDB - BANGKOK

Prepared by:

Arne Jacobsen
Storhoejevej
DK 8400 Ebeltoft
Denmark

April 1986

Project Ref.: UNDP ST/THA/85/802

30th April 1986

[illegible]
[illegible] International Centre
[illegible]
[illegible]

Dear Sirs,

Re Project SI/THA/85/802/11-51 - Computer systems for the office of the Eastern Seaboard Development Committee. NESDB, Bangkok

Attached please find the final report on above project.

Chapter 3 "Management Summary" summarizes the contents.

The report has been discussed with the Management, staff and foreign experts at the OESDC who all expressed their full acceptance, approval and appreciation of the report.

Considering the present stage of the Eastern Seaboard Development Programme discussions outside OESDC have not been relevant.

In closing I wish to express my appreciation of the support and hospitality extended by OESDC's Management and staff as well as by UNDP during the study.

Yours truly,

[illegible]

[illegible]
[illegible]
[illegible] Eheltoft
[illegible]

[illegible] Savit Bhotiwines, Director, Office of Eastern Seaboard Development Committee
[illegible] Kimpara, UNDP/Unido, Bangkok

TABLE OF CONTENTS

1. Study objectives, assumptions and limitations
2. Study approach
3. Management summary
4. Present situation
   4.1 Organization and projects
   4.2 Present staffing and tasks
   4.3 Present dataprocessing equipment
   4.4 Present data problems
5. OESB's objectives and operational activities
6. Appraisal of OESB's computer processing needs and possibilities
7. Proposal
   7.1 Proposed level of initial computer ambitions
   7.2 Proposed computer usage, systems, and priorities
   7.3 Computer capacity requirements
      7.3.1 Transaction complexity
      7.3.2 Software and disk storage requirements
      7.3.3 Central processor sizing (CPU)
      7.3.4 Disk storage back-up
      7.3.5 Work stations/VDU's
      7.3.6 Printer requirements
   7.4 Proposed computer configuration
      7.4.1 The hardware
      7.4.2 Physical installation data and requirements
      7.4.3 Future extension/upgrading possibilities
   7.5 Physical computer acquisition
      7.5.1 Computer and vendor selection considerations
      7.5.2 Vendor alternatives for OESB
      7.5.3 Cost
   7.6 OESB's internal computer organization
      7.6.1 Functional requirements
      7.6.2 Proposed staffing and job descriptions
      7.6.3 Computer staff training
      7.6.4 User staff training
8. Additional requirements for successful computer operations at OESB
   8.1 Organizational clearness and responsibilities
   8.2 Datadiscipline
   8.3 Systems documentation

A P P E N D I C E S

Appendix	1	Overview: Organizational units, agencies, projects
"	2	Distribution of general task areas on present staff
"	3	OESB's present data-processing equipment
"	4	Details on present computer equipment
"	5	Software used on present equipment
"	6	Summary of OESB's present and foreseen activities
"	7	System outlines: Functions, output, filedata
"	8	MicroVAXII hardware details
"	9	Summary of program library contents for MicroVAX11 and PDP11.
"	10	Summary of software required at OESB

Prepared by:

Arne Jacobsen
2 Storkhoejevej
DK 8400 Ebeltoft
Denmark

April 1986

1. STUDY OBJECTIVES, ASSUMPTIONS AND LIMITATIONS

STUDY OBJECTIVES

- to study the requirements and propose appropriate hardware and software for Office of the Eastern Seaboard (hereafter referred to as OESB), enabling a strengthening of OESB's efficiency in managing the implementation of the ESB development programme.

STUDY OUTPUT WILL AIM AT

- to identify and define OESB's computer processing requirements and propose corresponding systems for subsequent detailed systems design and programming.

- recommend and give basis for management decision to acquire appropriate computer hardware and software, in sufficient details for obtaining specific vendor offers.

- to advise on expertise, training and other requirements to operate and utilize said computer systems.

STUDY ASSUMPTIONS AND LIMITATIONS

- the time horizon to be 5 years, viz up to about 1990.

- the installation and systems are to cover OESB's own computer processing needs only, not the needs of implementing agencies or other government bodies except to the extent this might improve OESB's own efficiency and operational relations with and towards said external parties.

- OESB will move to the premises of IEAT late 1986, also to be the location of the planned computer.

- the study excludes the special metropolitan, provincial and national water resource planning activities presently performed by CIPO, except to the extent said activities are considered as implementation projects identical to other Eastern Seaboard project within the responsibility of OESB.

- it is understood that the objective of OESB to co-ordinate covers a de facto co-responsibility for the projects being completed as planned and/or to take appropriate corrective actions.

- it is further understood that all projects included in the ESB Development Programme have been identified as specified in Appendix 1.

- the proposal shall focus on the ESB development areas as presently defined, however, be flexible as regards inclusion of new areas which may be decided upon later.

- it is understood that, for practical purposes, the only resource to be managed by OESB is funds, not manpower and/or other physical construction resources.

2. STUDY APPROACH

Due to the general freeze since late 1985, ESB's activities so far have, in reality, concentrated on policy issues, fund raising activities, expert studies, relations to agencies and other government bodies and similar general matters.

The more practical/administrative side of OESB's future functions have still not been considered or defined, viz which actual activities to be performed, with which managerial and administrative results to be produced (output) etc.

Further, the future tasks have not yet been formally delegated beyond Director's level as specific responsibilities of specific staff members.

The study has, therefore, primarily been based on the following materials:

- Office of the Eastern Seaboard: Proposed profile by Coopers and Lybrand Ass, Feb. 1985
- The executive order on the Eastern Seaboard Development, 1985.
- Map Ta Phut Financial Plan October 1985 by OESB.
- Overview Eastern Seaboard Development Programme, Feb. 1986
- Supplementary investigations of OESB's facilities, present computer equipment and usage etc.

with supplementary questions to individual staff members, other experts presently attached to OESB and local computer vendors.

As the future computer requirements cannot be related to existing activities (as the latter are not yet defined and/or being performed) the proposal has, therefore, been based on a TOP-DOWN DEFINITION as follows:

OESB's future/expected objectives

- OESB subsequently required activities
- the subsequently required work/specific tasks to solve the activities
- the subsequently required computer needs/possibilities to perform the work

- the " " specific computer systems

- the " " hardware/software

- the " " configuration, organization, staffing, additional requirements.

TERMINOLOGY

By intention, this report is expressed in non-technical words to the extent practical.

For simplification, the abbreviation EDP (Electronic Data Processing) is used as a synonym for computer processing.

3. MANAGEMENT SUMMARY

Study approach

The terms of reference specified the objective of the report "to strengthen and improve the efficiency of OESB's activities by means of computer systems".

At the time this study was commissioned, the build-up of the OESB staff and activities as well as actual site constructions were planned to start in September/October 1985. The total development programme was however, officially "frozen" pending a Cabinet-level review of the entire Eastern Seaboard Development Programme.

In December,1985 the Cabinet resolved to proceed with the programme but the "freeze" on infrastructure commitments would continue until the contract for construction of the National Fertilizer Plant was signed, now expected in May 1986.

Apart from tendering preparatory work on the Map Ta Put Port and IE/UA the LCB Port and Nongko-LCB pipeline design and funding activities regarding the fertilizer complex, all of OESB's practical administrative work was halted.

Consequently, above terms of reference cannot be related to or based on improving existing procedures but can only be discussed as possible future areas of using computer systems when, and if, OESB commences it's practical operations without significant changes in objectives and extent of programme as known today.

Present computer capacity

The present computer hardware situation is described in chapter 4 with supporting appendices concluding that, even if the equipment consists of different makes, the capacity is sufficient in the present situation.

The only use at present is for wordprocessing by the secretarial staff financial spreadsheets analysis by Dr. Channarong and the foreign experts.

Present computer problems

The limited use of the presently available capacity is, of course, largely due to the absence of administrative activities.

However, a number of problems have reduced or even prevented the use of computers so far.

The major problems are detailed in chapter 4.4, in summary they are:

* Lack of operating EDP budget.

  This causes complete inability to maintain the equipment, purchase necessary manuals, stationary, external training etc.

* Lack of user training and user expertise.

  In addition to above lack of funds, also lack of time for and/or interest in training seems to have led to a very low level of basic EDP knowledge and simple operational expertise.

* Apparent lack of disk capacity.

  Due to lack of technical equipment maintenance, user training etc. the practical utilization of available disk space is very inefficient.

  The problem is, however, not a capacity problem.

* Limited memory size.

  Both the PDP and the Olivetti PC have limited memory size for execution, causing unacceptable waiting time and also inability to run more comprehensive (modern) programs.

OESB's objectives, operational activities and computer needs

Chapter 5 specifies OESB's objectives and the subsequently required operational activities when the Eastern Seaboard Development Programme is fully reactivated again.

In chapter 6 each of the foreseen activities is appraised as to their computer processing needs and possibilities concluding - in chapter 7 - with the detailed proposal as follows:

Chapter	7.1	Proposed level of computer ambitions
"	7.2	Overview of proposed systems and priorities
"	7.3	Computer capacity requirements including software
"	7.4	Proposed actual configuration
"	7.5	Physical computer acquisition, vendor selection and cost
"	7.6	The required internal EDP organization, job descriptions, and training requirements.

The computer systems required

In view of the fact that OESB's main task is to liaise and act as the overall practical communication link between all the parties involved in the Development Programme, OESB's own "heavy" routine administrative tasks are limited.

Consequently, also the required computer systems are relatively few. The following systems/computer usage is proposed:

* the establishing of a project planning and performance control system recording and maintaining all details on planned versus actual implementation progress as regards time, activities and cost (funds)
  - per individual project
  - per implementing agency
  - per development area
  - per ESB total development program

* the establishing of a project operations performance control system enabling OESB to follow that the financial and operational performance of projects in operation (when implementation has been completed) is in line with set policies and overall goals.

* the establishing of a project reference database with all fixed information pertaining to the individual projects.

* the establishing of a meeting reference database with all important details of all meetings, decisions etc. related to the ESB Programme.

* the establishing of a library reference database recording and giving reference to all studies, proposals, reports, tender documents and other material/publications related to the ESB Development Programme.

* the continued and extended use of computerized spreadsheets, financial modelling, financial analysis standard programs etc. in the project feasibility and investment appraisal analysis and long-range financial/economic planning.

* the establishing of a land acquisition database with all details on lot basis of land acquired, status of acquisition, reselling details etc.

* the establishing of an OESB internal accounting system for control of OESB's internal budget. This application, however, only to the extent not being done by NESDB or if latter system is insufficient for OESB's own purposes.

* the establishing of appropriate computer models for price- and tariff calculations for common facilities: Water supplies, power, transportation etc.

* the establishing of appropriate computer models to calculate and monitor the required and utilized capacities of common infrastructure and industry facilities e.g. water, power, transportation etc. both as regards physical capacities and cost recovery.

* the establishing of computerized models to follow and continuously forecast the actual estate and industry utilization and actual composition to follow the cumulative long-range effects on pollution, manpower, common facilities etc.

In connection with above proposed computer systems it should be noted that computerization of any organization, being a commercial company or a government body, is not a one-time activity but a continuing process due to changed and new requirements. OESB cannot, therefore, expect their computer requirements to remain static throughout the 5 year Programme implementation period.

Therefore, once the capacity has been installed and - even more important - the qualified internal OESB support has been established (the systems analyst, see later) all OESB's working procedures should be routinely reviewed for possible additional elements and/or new routines to be computerized by means of one of the numerous existing standard programs.

This ongoing "computerization" is,in fact,a major responsibility of the OESB systems analyst.

The hardware required

The present hardware is (except for lack of maintenance and staff training) fully functional, however, capacitywise too limited also for the future applications.

It is proposed, therefore, to install a new main unit, a DIGITAL MicroVAXII, to which the major part of the existing equipment can be directly connected still be able to operate independently.

The DIGITAL MicroVAX presents the latest computer technology and will (in the proposed configuration) comprise 4 Mbyte memory, 71 Mbyte disk storage, 95 Mbyte cartridge tape storage and 5 new VDU-terminals, with add-on extension possibilities if this (for today unknown reasons) should be required.

To increase the overall utility of the present Olivetti PC it is further proposed to upgrade this unit to 640Kbyte and attach 10Mbyte disk storage.

Chapter 7.4 includes a graphic overview of OESB's future equipment.

Computer make and vendor selection.

As all modern computers are technically equally qualified, the major selection criteria are non-technical, the most important being:

* The new equipments hardware and software compatability with existing equipment
* Vendor's software support qualifications and capacities
* Vendor's hardware maintenance support
* Vendor's wish and ability to consider integration with other vendors' equipment.
* Vendor's documentation standard.
* Vendor's training level, extent and quality
* Cost of hardware, software and other vendor services

Chapter 7.5.1 discusses in detail the above and other selection criteria concluding that DIGITAL (supplied by BDC - Bangkok Data Center) meets most criteria including the most important compared to IBM, NEC, Hitachi, Olivetti, Nixdorf and Siemens.

Especially with regard to an IBM alternative, the following negative points are noted:

- It is a stated IBM policy not to discuss or consider non-IBM equipment. Consequently, the continued use of present equipment and efficient, continued integration to an IBM computer, would be very doubtful and at any rate left entirely to OESB's own experiments.
- The same "IBM-interest-only" also applies to software. Thus only IBM authorized application software is being sold, supported, trained etc. by IBM.

- It is an IBM policy to split the sales of their hardware products over different channels/agents. No doubt this increases the overall IBM sales, however, it does not necessarily guarantee a customer the best solution to his problems.

- IBM's prices and pricing policy generally increase the cost by 50-75% over qualified alternatives. Also,IBM's free services (being installation assistance, software packages, documentation, training, direct system design support etc) are generally extremely limited.

- Finally, considering OESB's equipment requirements, IBM is likely to be "too big" to maintain their interest in OESB and be an efficient "working partner" in the day-to-day problems, especially considering the alternative support from BDC.

The programming requirements

Considering

* the lack of any previous programming experience or "computer program development environment" at OESB
* the need for fast implementation and efficient operations once the activities of OESB are started again
* the comprehensive program library directly available from Digital and others (ref. appendix 9) as well as from BDC, thereby utilizing many years practical experience
* the need for sturdy, efficient systems without errors and long periods for testing, corrections, retestings, additions etc.
* that OESB's systems will and can be kept reasonably static
* the considerable time and cost required for tailormaking own systems from scratch

it is proposed that OESB make utmost use of the program libraries readily available.

Also,it is understood that BDC has corresponding programs in virtually all areas which can be copied free of charge for OESB's own use.

Appendix 10 summarises the software types required, the detailed versions of which to be discussed between BDC and the proposed OESB systems analyst.

The physical installation requirements

The proposed MicroVAX11 can operate in any normal office environment and has no special operating requirements except airconditioning during working hours and (preferably) a voltage stabilizer.

The new computer room at IFAT building has been inspected and found very satisfactory.

Today all OESB's equipment including terminals and PC's are located centrally in the computer room. It should be noted, however, that in order to integrate the use of computing in the daily work, the terminals as well as the PCs should be physically located at the staff's own desks (their location), with cables connecting the individual terminals to the centrally located processors, disk storages and lineprinter.

The internal EDP organisation: Requirements, staffing, qualifications.

In order to make the new installation function correctly and efficiently it is an absolute must that OESB establish a qualified internal EDP support staff.

Chapter 7.6.1 discusses the functional requirements as regards programming -, systems analyst and design - and operator requirements. It concludes that as the programming will and should be covered by standard software packages/existing program tools to the extent possible, the important support areas will be within the detailed systems definitions, implementations, operation of central equipment and operational assistance to the user staff.

To ensure a smooth operation and mutual back-up,the EDP staff is proposed to comprise

1 systems analyst, with a background enabling him to work 3/4 on analyst/design/implementation related tasks and 1/4 on programming related tasks.

1 operator to cover the central operations as well as other general computer related tasks.

The chapter also includes proposed job descriptions for each of above. Also,it proposes the technical MicroVAX11 training required but, at the same time stresses the importance that the candidates have proven practical experience within their job descriptions.

The user training requirements.

A fundamental problem so far is the lack of user training. This area must, therefore, be given priority in time and funds if any further computerization is to be successful.

Chapter 7.6.4 proposes a 2 x 1 week internal seminar to be organized by EDC. As noted,the subjects listed are not especially sophisticated, high-level or extensive but aim primarily on the fundamentals in modern computers, the tools available and "how to work with computers".

The cost involved

Chapters 7.5.3 and 7.6.4 specify the various cost involved.

In summary the estimated investment costs are:

- Hardware	US$	87.000
- Software: Systems software	"	9.000
Application "	"	11.000
- User training seminar	"	1,5-2.000
In total estimated	US$	110.000

It is noted that above cost includes US$ 30.000 (52%) for tax and duties on imported MicroVAX11 hardware and systems software.

Additional requirements for successful computer operations at OESB

In addition to the pure hardware, software, and specific internal EDP support functions as elaborated in the report, other factors are decisive for any successful computer operation. Consequently these factors require Management's continued close attention.

In relation to OESB, the most important factors are, as further elaborated in chapter 7.1 and 8:

* at any time to maintain a realistic level of computer ambitions, measured against the organization and staff's ability to understand, accept, adapt to, rely on and work with the systems.

* at any time to maintain organizational clearness and delegation of responsibilities.

  While, of course, the overall responsibility always remains with the General Management, the day-to-day operations require delegation of the precise working responsibilities for the specific tasks to specific staff members, in other words to clarify WHICH, WHAT, WHO, WHEN WHERE, HOW.

* at any time to ensure and maintain the required level of data discipline.

* at any time to ensure the presence of complete, understandable, continuously updated systems documentation enabling the staff to understand precisely what each system can do and not do, how to perform data entry, database inquiries etc.

  In this connection, it is equally important to follow up on staff's scheduled training and - if need be - to initiate further training activities.

Proposed further approach and sequence of activities.

Considering the present pending stage of the entire ESB development programme, no external costs should, of course, be committed until the programme is started again.

However, in the opinion of the writer, the true administrative problems at OESB to come will not be computer technical problems but rather problems in converting present overall "policy issues" to day-to-day operations.

It is strongly recommended, therefore, that OESB utilizes the waiting time to complete the internal discussions and definitions of the more precise systems and procedures eventually to be established.

Otherwise 2-3 months may be required after the go-ahead is given but before actual computerization can be started.

The further approach and sequence of principal activities is proposed as follows:

Activity	By
* Definition/delegation of the individual working responsibilities. - Functional manager responsibility - Operating staff responsibility	Management
* Definition of working tasks: Precisely which tasks are to be performed.	The functional manager responsible for the task (s) in question.
* Definition of working objectives and working information: Precisely what is the contents of each task. Which file data, which output reports with which (approximately) contents/type of information, at which frequencies etc.	Functional responsible in cooperation with day-to-day operational responsible person (s)
* Recruitement of systems analyst and operator.	Management
* Training period for systems analyst and operator.	BDC
* User training period	BDC supported by systems analyst/operator
* Discussion of above user defined working information requirements with the individual user.	Systems analyst and individual users
* Research for/studying of available BDC/Digital standard software and software tools as proposed in the Report to establish the most suitable.	Systems analyst in cooperation with BDC staff and users as relevant.

* Discuss results of above research with end users. Modify previous systems definitions made by users correspondingly.	Systems analyst and users
* Finalize/coordinate overall systems plan, databases etc.	Systems analyst
* Confirmation by Management	Management and systems analyst
* Re-check hardware capacity requirements against Report's recommendations. Adjust as required. Recheck budget.	Systems analyst
* Order hardware and software	Management and systems analyst
* Physical implementation of hardware and software.	Systems analyst and operator.

4. PRESENT SITUATION

4.1 ORGANIZATION AND PROJECTS

Appendix 1 specifies the various organizations, implementing agencies and other government offices as well as the individual projects per area making up the "Eastern Seaboard Development Programme".

For further details, reference is made to "Overview Eastern Seaboard Development Programme", February 1986.

4.2 PRESENT STAFFING AND TASKS

The present staff comprises 1 Director, 15 government officers, 7 secretaries plus a number of general office support clerks, drivers etc.

Presently, 6 foreign experts are attached to OESB for various length of time.

Appendix 2 illustrates the staff's general area of activities. As noted at the bottom line of Appendix 2, certain OESB staff members also perform non-OESB activities, primarily water resource development and flood control activities (in total estimated at 3,1 persons out of above 15 persons.

4.3 PRESENT DATA PROCESSING EQUIPMENT

Due to aid contributions from various hardware sales companies, the present data processing equipment is a mixture of 4 different makes:

	Year of installation	Estimated degree of utilization
1 Digital Equipment Corp. Micro PDP.	1982	80%
1 Osborne PC	Early 1983	10%

1 Olivetti PC	1985	80%
1 NEC PC	1984	10-20%

The equipment is mutually compatible only to a very limited extent as illustrated in appendix 3.

The details of each unit appear in appendix 4.

Technically, all equipment is still fully functional. However, 3 of the units are only limited size PC's of which the OSBORNE cannot be serviced and the NEC is totally incompatible with the other systems.

The main unit - the DIGITAL PDP - is now technology-wise about 15 years old and is no longer sold by Digital. The unit has a maximum CPU capacity of 128 Kbytes, 40 Mbytes disk capacity and only upto 6 user terminals. However, if more than 4 terminals are attached, the response time become unacceptable in practice.

Since being marketed 15 years ago, the PDP has been replaced first by the Digital VAX700 series which is now superceeded performance and costwise by the MicroVAXII series.

In conclusion, therefore, the present equipment is considered insufficient for OESB's foreseen/future activities.

4.4 PRESENT DATA PROCESSING PROBLEMS

While the present PDP11/23 is still functional, the following problems - none of which are due to technical obsolescence - seriously limit and even prevent the use of the PDP11/23 system:

* Lack of operating budget for EDP.

  The PDP was left by a previously contracted consultant firm Louis Berger International, Inc. but has apparently never been formally transferred to Government property.

  Consequently, there is no OESB budget for equipment maintenance, training, acquisition of useful standard software, manuals, stationary, etc. necessary for efficient operation of the system.

  Especially the lack of maintenance is serious, apparently even making users reluctant to use the equipment altogether for fear of possible breakdown and loss of data.

  It is understood that,so far, Bangkok Data Center has performed minor repairs at the cost of spare parts only.

* Lack of training and/or user expertise.

  To some extent this is also caused by lack of budget for purchasing the required manuals. However, further major causes are lack of time and general interest in selfstudy of available manuals in using the system at all or to improve one's own EDP efficiency ,e.g. in the use of the proper and all wordprocessing facilities.

  Many simple commands and systems functions (e.g. like changing disk cartridge) are supposed to be performed by the user himself. However, for above reasons this is not so and if Mr. Pitak is not immediately available, the user often prefers to cancel or postphone using the PDP.

* Apparent lack of disk capacity.

  Some users refer to limitations in disk capacity. However, analysis of the contents of the present 7 removeable disk cartridges reveal the following situation:

Available capacity:	7 x 10.4Mbyte =	73 Mbytes
Utilized:		43 " = 59%
Available:		30 Mbytes = 41%

  Furthermore, many user files are not being maintained (deleted) and also many systemfiles are kept in several parallel copies/ versions for fear of technical reading problems later.

  If the disk space was properly maintained, the above 59% could be very significantly reduced.

  Finally, one of the 7 disk cartridges (10.4 Mbytes) is unuseable due to lack of equipment maintenance (reading errors).

* Limited memory size.

  Some application programs require considerable memory during program execution, e.g. wordprocessing LEX11, Datatrieve, Txteditor, compilers etc.

  If two users access the system simultaneously, the system will automatically "flip-flop" program segments in and out of memory, causing unacceptable waiting time.

* Graphic printing capability.

  It was claimed that the PDP printer (CENTRONIC) cannot perform graphic printing.

  However, being a dot-matrix printer type already, the graphic capability is not a hardware feature but programme controlled. Therefore, any PDP11/23 application program including graphics would function also today.

As regards the OLIVETTI PC three problems have been located:

* the 256Kbyte memory is too limited for efficient use of newer versions of spreadsheets, e.g. LOTUS requires 125Kbytes plus workspace for matrices.

  The LOTUS successor SYMPHONY, now also comprising graphics, enlarged database, wordprocessing etc. requires minimum 512 Kbytes, preferably 640Kbytes.

* the Olivetti PC has no datastorage (disk) and all input/ output data must be loaded each time via diskettes

  A 10Mbyte disk would greatly improve the performance and utility as a freestanding PC.

* so far the Olivetti has worked independently without data transfer to/from the PDP11/23.

  In order to utilize data stored on the central (new) equipment, an upload/download data transfer facility should be installed.

5. OESB'S OBJECTIVES AND OPERATIONAL ACTIVITIES

The objectives of OESB are:

* to control the overall progression of the implementation of the Eastern Seaboard Programme, within the policy and implementation guidelines set by ESDC.

* to initiate actions and guide implementing agencies in the execution of their respective Eastern Seaboard projects

* to coordinate, analyse and consolidate plans and budgets of agencies' projects, reporting progress to ESDC.

* to prepare consolidated and integrated financial statements of projects for submission to ESDC and other authorized parties.

* to coordinate the allocation of funds to implementing agencies so that they can accomplish their objectives on schedule.

The practical, operational activities at OESB to fulfill above objectives can be grouped as follows:

* General activities

  - Management-, strategy- and policy activities

  - Infrastructure development activities

  - Industrial development activities

  - OESB office administration activities.

* Project related activities

  - Project feasibility activities

  - Project planning and organization activities

  - Project commissioning & contracting activities

  - Project development and implementation activities

  - Project operations control activities

* Water resource and flood control activities

  - Collection of data for water management and resource management (in development areas only)

Following above overall grouping, the detailed activities of each group have been considered and defined as specified in appendix 6.

6. APPRAISAL OF OESB'S COMPUTER PROCESSING NEEDS AND POSSIBILITIES

By carefully considering the planned and foreseen contents of each activity to be performed by OESB, the following computer processing needs and possibilities have been identified, in order of activity reference numbers as per appendix 6:

PROJECT REFERENCE DATABASE

Related activities: 1.11 - 1.14

To enable instant and complete retrieval of (constantly updated) important fixed project relevant details, a project reference database should be established.

The database shall in principle contain all fixed project information e.g.

- Project staffing, Practical details on names, locations, telephone numbers etc.
- Project organization and responsibilities
- Ownership and/or investor details
- Implementing/involved agency details
- Contractor details (to extent relevant)
- etc.

The textfile structure of the database should allow the recording - at any time - of any additional reference details as found convenient to store for instant retrieval via screens or as hardcopy print.

MEETING REFERENCE INFORMATION DATABASE

Related activities: 1.11 - 1.14

An important management requirement is to be able to locate and instantly retrieve important history details on all meetings, decisions etc. related to the complete development programme.

A meeting-reference-database should, therefore, be created and maintained, containing briefs/summaries of all formal meetings, i.e.
"ESDB meetings, ESBC meetings, OESB management meetings, Technical steering committee meetings, agency meetings, indiv. project meetings etc.

Containing the following minimum details:

- Type/category of meeting, date of meeting, location/place of meeting, participants/absentees, items discussed/agenda, conclusions/decisions made, if official "summary of meeting" was prepared (=is available for further details), date of previous/latest meeting preceeding current meeting to ensure possible unbroken retrieval of all meetings etc.

This database should also be organized as a variable textfile giving full flexibility in contents, however, in such a way that retrieval/search is possible on "type of meeting" and "date of meeting".

As "other meeting" can also be recorded ad hoc meetings by individuals of OESB management group, enabling easy and full retrieval of virtually all formal meetings having been held.

MANAGEMENT AND MONITORING OF LAND ACQUISITIONS AND SALES

Related activity: 1.21

This activity often requires retrieval of "history data" and search on specific characteristics.

All relevant details should, therefore, be registrered in a database on lot-basis for each development area, enabling OESB to keep track and records of all land acquisitions, lots still reserved etc.

Said database - being ideal for computerization - should minimum contain area identification, lot ref nr, owner details, lot size, selling agent, acquisition cost and status etc.

In connection with the Map Ta Phut acquisitions, a corresponding database was temporarily established on an IEAT rented Phillips microcomputer.

The database has now been discontinued but should - for proper retrieval and recording purposes - be regenerated on OESB's own computer and extended with further Laem Chabang and other acquisitions related to the ESB developments.

MANAGEMENT AND MONITORING OF INFRASTRUCTURE AND - INDUSTRY REQUIREMENTS

Related activities: 1.23, 1.25 and 3.1

This activity involves a close follow up and monitoring of

a) capacities available versus foreseen/expected and in turn actually being utilized by each individual industry/estate

and

b) cost including cost recovery in providing said facilities

as regards water capacities, transportation (rail/road), power capacities, communication capacities, housing capacities, social institutions, other support capacities.

Considering the many types of users, different and fluctuating usage, different pricing schemes, the capacity management activity should be computerized, enabling OESB to maintain sufficient overview of both the immediate and projected future situation.

MANAGEMENT AND MONITORING PRICING STRUCTURES, CHARGES/TARIFFS, RECOVERY STATUS ETC.

Related activities: 1.25, 1.23

In connection with calculating cost and/or selling prices for aforementioned facilities - coherent with set policies on recovery time, industry incentives etc. - OESB needs to perform extensive calculations including on future forecasted usage.

For each facility for which pricing and pricing structure is the responsibility of OESB, a computer model should be established, enabling OESB on ad hoc basis to perform calcultions/forecasting/simulations etc. on latest data and/or variable input parametres.

ESTATE AND INDUSTRY UTILIZATION AND - COMPOSITION

Related activities: 1.34, 1.31, 1.32, 1.33, 1.35

It is the aim of the programme to ensure a balanced number and types of industries within each development area based on set policies on

- polution and other environmental considerations
- manpower/labour skills and intensive considerations
- preference to downstream industries
- supporting industry considerations
- effects on / requirements from common facilities (water, electricity etc.)
- expected/planned/continued profitability of individual industries and overall ESB economy
- etc.

This activity requires, therefore, a continued overview of the foreseen/forecasted effects of actual and cumulative utilization within each industrial complex.

The principal characteristics of each new "industry" or enterprise should thus be expressed in a number of specific measureable standards, in turn being input in a computer model.

Said model should calculate and report the updated and forecasted effects of the ongoing industrialization in the entire area - in relation to the policies to be monitored.

OESB INTERNAL ACCOUNTING

Related activity: 1.41

It is understood that OESB's internal accounting presently is done solely by NESDB.

It is not known whether this procedure is to continue after the move to the IEAT building or whether the NESDB chart of accounts is sufficiently detailed for OESB's cost management and - control

purposes.

If not, a reasonable simple accounting system should be established.

If volume and complexity warrants, the system may be computerized.

LIBRARY INVENTORY AND REFERENCE SYSTEM

Related activities: 1.43

A fundamental basis for and input to the implementation and control of the ESB developments, is the very large number of studies, reports, publications, tender documents etc., both on individual projects, on project activities as well as on cross-project or overall programme level.

It seems a must, therefore, to establish an efficient, computerized library inventory and reference database, enabling OESB to locate and retrieve all relevant material pertaining to the question at hand.

The database should minimum contain:

Publication type, publication name, author, issuing date, subject/subject group, location, project references (for retrieval of specific project related literature as relevant).

It is noted that above library system, essentually being a filing system, also can include individual documents and letters of value to record as "programme documentation".

PROJECT FEASIBILITY AND/OR INVESTMENT APPRAISAL ANALYSIS

Related activities: 2.11, 2.12

A major responsibility of OESB is to prepare investment proposals, alternatives, evaluate required funds etc. most likely under alternative options/parametres.

This activity requires many and extensive financial analysis not practical to perform manually, e.g.

- cost/funding requirements

- break even analysis

- risk analysis

- cash flow/funds availability analysis

- currency calculations and analysis

- etc.

by means of existing standard analysis software and/or computerized spreadsheets like LOTUS 1-2-3 or SYMPHONY, the former as presently being used on the Olivetti and on the financial expert's private IBM PC for financial analysis.

PREPARATION OF TENDER MATERIALS, CONTRACTS AND OTHER REPETITIVE DOCUMENTATION

Related activities: 2.31, 2.34

This activity is characteristic in requiring

- extensive typing work

- need for continued completeness and accuracy even if reprinted due to corrections

- repetitive use of same material once completed

- ensure continued inclusion of all contractual and legal terms and paragraphs in all subsequent printings unless otherwise instructed

- requires (often) special editing

in other words, the characteristics of computerised wordprocessing

It is noted that wordprocessing is already being used on existing equipment.

PROJECT IMPLEMENTATION PLANNING AND PERFORMANCE CONTROL

Relevant activities: 2.21, 2.22, 2.41, 2.42, 2.23

Like any major project, each project within the total development plan may consist of many activities with many sub-activities. The detailed planning and follow up of these is, of course, to be done by and at the responsibility of the implementing agency.

However, it is considered the overall responsibility of OESB (and a major reason for establishing OESB as the management office of the development programme) to follow - at a higher less detailed level -

- that each agent is in fact performing according to agreed time plans and allocated funds

- that all projects are being implemented in a coordinated manner and in time ensuring that the complete programme is implemented within the 5 year plan

- that, incase of specific deviations in either of above, to take appropriate steps to avoid a negative development or take appropriate corrective action.

It is necessary, therefore, to establish an efficient computerized project management system enabling OESB - minimum at the end of each month - to follow up on the three principal project parametres:

Time:
- Planned versus actual duration time for each activity
- Earliest and latest activity start time and thereby available slacktime.

Activities:
- Complete status of each activity

Funds/cost:
- Planned disbursements versus actual payments made
- Funds available (liquidity/cash flow)
- Monitoring financial sources and source distribution on local and foreign sources
- to extent possible follow distribution on source types: Equity, loans, sales receipts etc.

Following each monthly update for each project of actual performance, the system shall calculate and report the latest as well as cumulative deviations in time and cost during the completed part of the implementation.

The practical project control can - in principle - be based on either time follow-up or cost follow-up.

Following the fact that all actual payments to be made are very carefully checked by the technical site supervisor against the degree of the physical completion of the work prior to each payment being authorized, the cumulative difference in planned versus actual cost (disbursements) reflects the immediate and

correct status of project completion.

Significant cost variations is indication that actual time is not following the planned time and should, therefore, result in review/correction of the planned time for one or more of the following activities inorder the system again reflects the precise time status.

Level of Calculations and Reportings

Based on ACTIVITIES being the common dominator to which both time and cost (funds) can be clearly allocated, the system shall be able to summarize and produce reports upwards at the following levels:

- by individual project
- by agency, assuming that only one implementing agency is responsible for one given project towards OESB
- by development area
- for the total ESB development program

Exception Reporting

From an overall management point of view OESB should focus on deviations from plan rather than comparing actual figures.

The information systems should, therefore, in addition to producing reports with all planned and actual figures, be able to produce reports only showing the deviations in time and cost for the immediate attention of OESB management.

Also whenever total reports are being produced, significant data requiring attention should be flagged or otherwise highlighted, viz with one, two or three stars.

Frequency of Updating and Reporting

As funds/allocations presumably follow fiscal months = calendar month, the principal frequency of updating and reporting actual progress should be monthly.

However, printouts should always be obtainable on request (ad hoc) based on latest (previous) updating.

PROJECT OPERATIONAL PERFORMANCE FOLLOW-UP

Related activities: 2.52, 2.53, 2.51

It is understood that OESB also should follow the continued general economic profitability of the projects after implementation has been completed, (viz the project goes into operations), in other words evaluate the extent to which the project follows the initial policy and development intentions.

This activity involves comparing and presumably also recording of agency/industry financial plans and budgets with subsequent entry of actual performance expressed as

financial data and

operations data = data expressing capacity utilization and trends versus targets, e.g. quantities produced, sold, imported/exported, nos. of containers handled etc. as relevant to the specific project/industry.

both with a certain amount of future projection.

At this moment OESB's requirements with regard both to extent and contents of said follow up of the projects further operations is however far too unclear to define in further details.

7. PROPOSAL

7.1 PROPOSED LEVEL OF INITIAL COMPUTER AMBITIONS

The degree to which computers can be applied, sophisticated and on-line integrated (including the use of external datatransmission in the daily work) is practically unlimited.

However, considering the present very limited extent of computer usage, level of systems and EDP operational expertise, the need for building-up the required level of data discipline, etc., it is strongly recommended to concentrate initially on establishing:

- the basic hardware configuration

  * without advanced hardware features which are not immediately required but which can be added-on gradually as the requirements materialize

  * which enables a gradual build-up of operational expertise

- the basic administrative and management systems

  * which ensure the recording of the fundamental data required for managing the ESB development programme

  * which enables the inclusion of future new systems and

  * with the possibility - at any future time - to extract data for use in more advanced "operations analysis models" if and when so required by management

- the basic EDP environment

As further discussed in chapter 8, this covers primarily

* gaining operational expertise both in quality and quantity both by dedicated EDP staff and by user department staff

* gaining user understanding of EDP's possibilities and capabilities

* gaining user understanding of EDP's requirements and/or limitations especially as regards data discipline.

* establish the necessary level of data discipline as regards file updating, error corrections, etc

* establish written documentation of the basic EDP systems

* establish organizational clearness of responsibilities of the day-to-day activities i.e WHAT - WHO - WHERE - WHEN - HOW

In conclusion, it is vital that the complexity of and speed in implementing information systems must be weighed against the level of above "EDP environment" and the staff's ability to accept, adapt to and work with the systems

Otherwise, any computer system is likely to fail for non-technical reasons.

7.2 PROPOSED COMPUTER USAGE SYSTEMS AND PRIORITIES

The various computer needs and possibilities identified in chapter 6 do not all have the same urgency

Assuming 3 priorities

priority 1 = systems to be established soonest possible

" 2 = systems to be established upon completion of priority 1 systems (say latest 1 year)

" 3 = remaining systems for completion (say in year 1-2)

the proposed usage of computer processing by OESB is - in summary - as follows:

PRIORITY 1 NEEDS:

* the establishing of a project reference database with all fixed information pertaining to the individual projects

* the establishing of a meeting reference database with all important details on all meetings, decisions etc. related to the ESB programme

* the establishing of a library reference database recording and giving reference to all studies, proposals, reports, tender documents and other material/publications related to the ESB Development Programme

* the continued and extended use of computerized spreadsheets, financial modelling, financial analysis standard programs etc. in the project feasibility and investment appraisal analysis and long-range financial/ economic planning.

* the establishing of a project planning and performance control system giving all details on planned versus actual implementation progress as regards time, activities and cost (funds) for the contruction phase

  per project

  per implementing agency

  per development area

  per ESB total development program

* the continued and extended use of wordprocessing in all kinds of typing work including tender- and contractual material (to extent produced by OESB), and other repetitive documentation.

PRIORITY 2 NEEDS:

* the establishing of a land acquisition database with all details on lot basis of land acquired, status of acquisitions etc.

* the establishing of an OESB internal accounting system for control of OESB's internal budget

This application , however , only to the extent not being done by NESDB or if the latter system is insufficient for OESB's own purposes

* the establishing of appropriate computer models for price - and tariff calculations for common facilities: Water supplies , power , transportation etc .

PRIORITY 3 NEEDS:

* the establishing of appropriate computer models to calculate and monitor the required and utilized capacities of common infrastructure - and industry facilities e g water power transportation etc both as regards physical capacities and cost recovery

* the establishing of computerized models to follow and continously forecast the actual estate - and industry utilization and - composition within each development area as regards the effect on polution manpower. common facilities etc
This application may be combined with aforementioned covering the general planning of capacity requirements However for practical purposes the results from the "capacity utilization" application should be used as input to the "capacity requirement" application thrather an directly combine the two applications

PRIORITY 2

* the establishing of a project operations performance control system enabling OESB to follow what the financial and operational performance of projects in operation (when implementation has been completed) is in line with set policies and overall goals.

Appendix 7 contains "System outlines" (functions output file data and file sizing) for the systems for which such outlines are relevant and can be given at this early stage.

7.3 COMPUTER CAPACITY REQUIREMENTS

		Disk space required	CPU capacity required
Operating system: MicroVAX VMS			512 Kb
Utilities , ref. appendix 9		30 MB	max 32 Kb per active user
Compilers , " "		2 Mb	
Communication software (external)		not required	
System files:	System history files	est max 10 Mb	nil
	Task work areas		
	Spove files		
	Job queue		
	Others		
User files:	Project reference file	est 50 Kb	total CPU workspace for file activities est. 32 Kb
	Meeting reference file	" 20 Mb	
	Land acquisition file	" 180 Kb	
	Library inventory file	" 200 Kb	
	Project planning and control file	" 550 Kb	
	Other user files	" max 1Mb	
User application software:			
	Standard software (Ref. appendix 9)	" max 4Mb	32Kb- 1 Mb however, most often in modules of 32 Kb per active user.
	Tailormade software: (As most OESB applications can be solved within the framework of exting standard software/tools , the need for tailormade programs will be very limited.)	" max 1Mb	
TOTAL ESTIMATE:	DISK STORAGE SPACE REQUIRED	50 Mb	
	CPU SIZE REQUIRED		0.6 - 2 Mb

7.3.3 Central processor sizing (CPU)

The required CPU size depends on

a) the software (number of bytes) to be resident in the CPU. Normally only the operating system.

a-c depends entirely on the computer make chosen.

d-f) depends primarily on the programming philosophy chosen:

the use of available/existing standardsoftware/user tools

versus

tailormade application programs and datafiles.

Considering

* the comprehensive program library directly available from Digital and/or BDS (and thereby utilizing yearlong experience directly available)
* the need for fast implementation and efficient operations once the implementation activities at OESB are re-started
* the lack of any previous programming experience or "computer program development invironment" at OESB
* the need for sturdy, efficient systems without long periods of testing, corrections, additions etc.
* the fact that OESB's applications (even if subjected to certain changes over the years to come) afterall are and/or can be kept resonable static
* the time and cost required in tailormaking all own systems from scratch

it is proposed that OESB can and should make use of existing software to extent possible at all

Appendix 9 illustrates the comprehensive library readily available for both MicroVAXII and existing PDP. In addition BDC has corresponding programs vertually within each area which software can be copied free.

Appendix 10 summarizes the software expectedly being most suitable for the individual OESB systems/application areas proposed.

In connection with the software proposed it is noted that modern programming tools are so versatile that the final program/program version can only be chosen in conjunction with the definition of all details, basically the precise definitions of output contents to be discussed with the end-users.

It is not possible - neither is it required - however, at this early stage to precisely decide which of the several tools to finally chose. This detailed discussion with BDC requires considerable time and will be a principal function of the proposed OESB systems analyst.

In summary and based on the MicroVAXII hardware being proposed in chapter 7.5 and the software as per appendix 10, the disk storage requirements are as follows:

7.3.1 Transaction complexity

The performance of a computer is signficantly influenced by

a) the number of physical disk oprations generated by each transaction (normally being equal to one VDU/screen picture) and

b) the transaction mix

The mix in general dataprocessing is typically as follows:

Complexity	Number of disk operations per transaction	% of total transaction number
Simple	1 - 2	35%
Medium	3 - 7	25%
Complex	8 - 25	30%
Very complex	26 - up	10%

Only in case where the proportion of "complex" exceeds 35% or "very complex" 12-15% special configuration considerations need to be taken

The complexity of OESB s applications will basically all be of class "simple" or "medium" mainly being straightforward database update and retrieval applications with none or very limited calculations

7.3.2 Software and disk storage requirements.

Disk storage space is required for:

a) The operating system programs

b) Operating system utilities: Support modules for the oper. system

c) Systems files, required by the operating system/utilities

d) Compilers, interpreters

e) User application programmes and tools

- standard application packages
- " utility tools e.g. automatic report generators, database management systems etc.
- tailormade programs.

f) user data files, being standard database systems or user tailormade data-storing-structures.

b) the software to be temporarily stored only when being called for processor execution

This software normally comprises utility software application standard programmes and tailormade programmes

c) the maximum number of simultaneous users each normally requiring his own CPU version (copy) of type b) programme

d) the size of (most often) variable work areas to be used by the specific user program e g number of matrix cells

As calculated in 7.3.2 and assuming average 5 active terminals the required CPU size can be estimated at 600KB - 2 MB.

The proposed configuration comes with a minimum CPU memory of 2 MB. To ensure that the CPU will at no time become a critical factor, a total memory size of 4 Mbytes is proposed.

7.3.4 Disk storage back-up

The proposed configuration must comprise a backup medium (devise) for library and file backup

The proposed VAXII includes a 95MB tape cartridge type backup as standard

The same devise is also used for (and therefore required) as system and utility software loading devise

7.3.5 Work Stations/VDU s

The number of user-workstations is estimated at 9 units 4 being connected to existing equipment 5 to the proposed new computer

The physical connections and assumed locations (which staff members) appear from the proposed configuration ref chapter 7.4.

The 2 present PC-types workstations (Olivetti and NEC) are foreseen also to be used for spreadsheet, financial analysis and other freestanding data manipulating tasks by Dr Channaronk , Mr Patai and attached experts.

For other use the standard VDU (not being PC-type) attached directly to VAXII will be sufficient.

If an expert - as presently Mr Kugler - prefers to work with own IBM PC - such PC and any other IBM compatible PC can be attached directly to VAXII as terminal or for data transfer to/from VAXII

7.3.6 Printer Requirements

A large proportion of output (especially database inquiries) should only be printed/displayed via VDU on request rather than being printed hardcop

For the physical line-printing the present Centronic 200 char/sec (equalling average 100-120 lines per minute) is considered sufficient when connected to the MicroVAXII . The same Centronic is able to produce graphic output if occationally required.
As illustrated in chapter 7.4 the only additional printer proposed is a high-quality printer for the VAXII textprocessing terminal

7.4 PROPOSED COMPUTER CONFIGURATION.

7.4.1 The hardware.

As discussed in chapter 7.5, it is proposed to acquire a computer of make Digital type MicroVAX11.

The MicroVAX11 is basically a "super-micro-computer" but having both hardware- and software capabilities of and compatibilities with the larger mainframesystems. It is marketed in 1985 and based on the very latest technology.

The MicroVAX11 is available in several versions = different standard combinations of hardware and extension possibilities.

4 versions: BA23(1), BA23(2), BA123 and COMPACT have been considered, the details of which appear in appendix 8.

Based on the future requirements as discussed in chapter 7.3 the proposal recommends version BA23(2).

To increase the utility of the OLIVETTI PC - obtainable for a limited cost - it is further proposed to increase it's memory from present 256Kb to 640Kb, attach a 10Mb disk storage and connect the Olivetti permanently to the MicroVAX11 via cable for ad hoc data transfer.

OVERVIEW: OESB's future computer equipment. Existing and proposed new units.

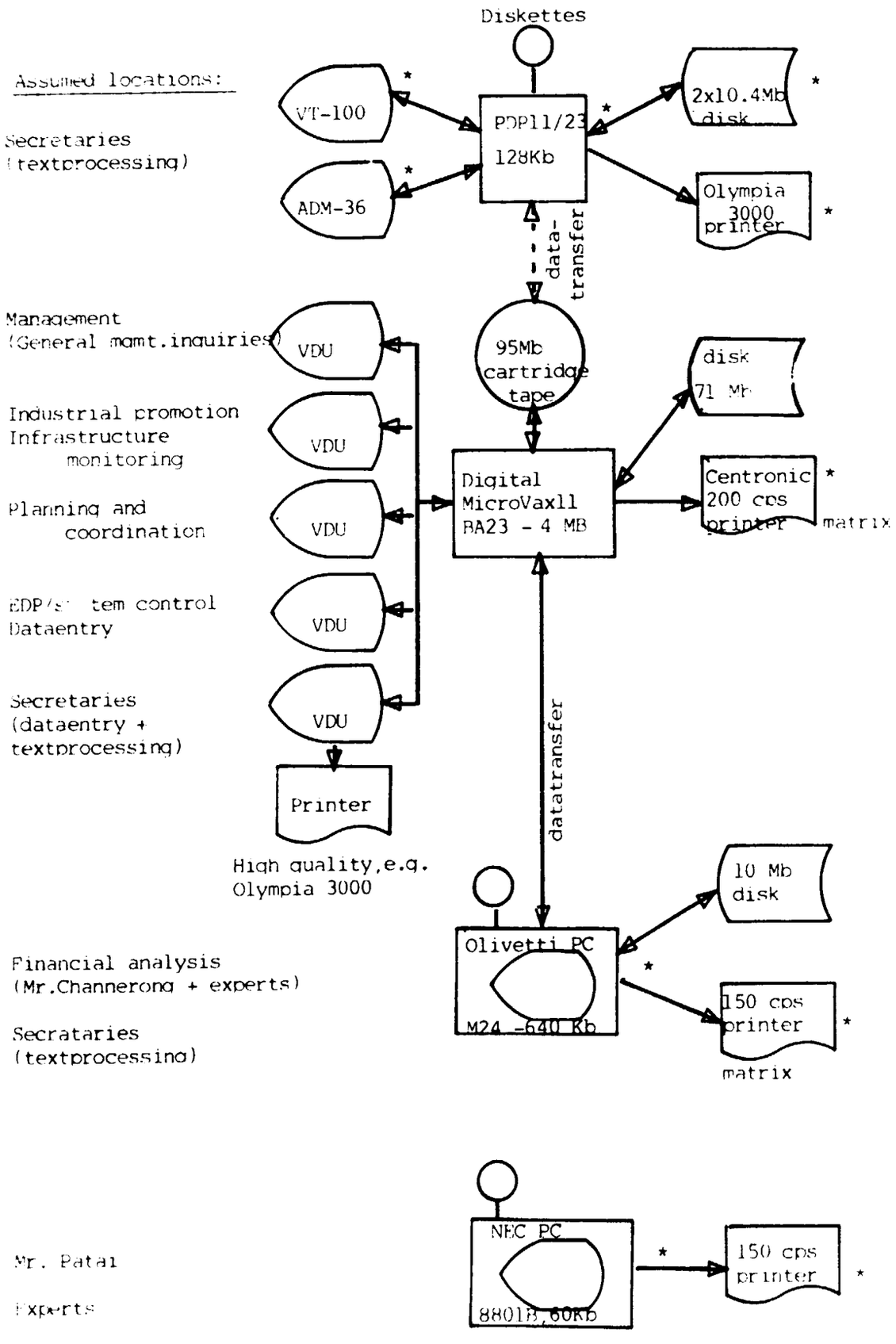

The diagrammatic illustration overleaf summarizes the proposed new installation as well as existing equipment still proposed to be used

It is noted that the present VDU VT-100 VDU-ADM 36 OLIVETTI M-24 and most likely also the NEC PC all can opreate as terminals directly against the VAXII if need be. However, with 5 new VAXII terminals such direct attachment of the present terminals is not considered necessary.

7.4.2 Physical Installation Data and Requirements

The MicroVAXII BA23 can operate in any normal office environment No special computer room or site preparations - like the oldtime reinforced floors - are required Basically the only requirement is airconditioning during computer working hours.

Outside working hours airconditioning is only required if there is risk of condensed water due to high humidity.

Due to frequent power fluctuations within Bangkok, a voltage stabilizer is strongly recommended 3 KW amp is sufficient for MicroWAWII. However, to allow for possible future upgrading , 5 KW amp is proposed .

The planned new computer room at IEAT - with it's raised floor for power and transmission cables - is considered very satisfactory.

It is noted that in todays usage of computers the direct user equipment (being VDU screens with keyboards and terminal printers) is and always should be physically placed at the users own desks (locations) not in a remote special computer room - in order that database inquiries , spreadsheet calculations , textprocessing , etc. become an integrated part of the daily administrative work

The significant technical details and data are:

Power (MicroVAXII main unit):

Voltage 240V (at 50 Hz)

Tolerance 176 - 256 V Voltage stabilizer not required on MicroVAXII

Consumption 345 watt

Operating environment

	MicroVAXII	Terminals
Temperature	15 - 28 Celc	10 - 40 Celc
Relative humidity	20 - 80%	10 - 90%

Dimensions

		H	W	D	Weight
MicroVAXII main unit	cm	62.2	25.4	72.4	50 kg
VDU monitor (each)	"	36.8	45.7	36.2	16 "
VDU keyboard (each)	"	8.9	45.7	20.5	2 "

7.4.3 Future Extension/upgrading of Proposed Computer

In principle, any computer installation consists of a number of individual units each with its own minimum/maximumc capacity which are mutually balanced to obtain optimal total throughput.

The critical components and potential bottlenecks are:

- the CPU size

- the disk storage space

- the number of terminals attachable

As can be seen from the following, the utilization is estimated to be only 30-50% of the immediate capacities Furthermore, both the CPU , disk space

and peripherals can still be extended within the proposed MicroVAXll line, beyond any maximum usage foreseen for OESB's purposes.

	CPU size	Disk space	User terminals
Proposed	4 MB	1 x 71 MB	5
Estimated usage	0.6 - 2MB (20-50%)	max 50 MB (70%)	
Immediate available spare capacity	2 - 3,4 MB (50-80%)	20 MB (30%)	7 (60%)
Upgrading maximum	9 MB	4 x 71 = 284 MB	12

From above it can be concluded that there is enough available space for additional usage within OESB or - if relevant - e.g. for CIPO s water resource and flood control applications

In the latter case, the important considerations are:

a) If analog processor is required instead of the digital processor used in administrative data processing

   If "sensors" or similar analog metres/devices are contemplated, most likely an analog processor is required

   If affirmative and based on past experience from similar type applications, the 2 areas of data processing should in the given environment not be combined on the same computer

b) the quality of datacommunication lines within Thailand

   By their nature water resource and flood control applications normally require datacommunication lines the quality and dependability of which can be decisive for on-line computerization.

It is further noted that should the aforementioned available and upgrading capacities still not be enough for new applications presently unknown the MicroVAXII can still grow within successively larger DIGITAL computers only by replacing the actual processing unit

Furthermore if staying within present computer line (DIGITAL) the printers , disk storage (most often), terminals and other peripherals can always be re-used . Also,all existing application software will be directly portable to other (larger) systems

7.5 PHYSICAL COMPUTER ACQUISITION

7.5.1 Computer and vendor selection considerations

In selecting the make of a new computer there are many and related considerations, the most significant being, in order of their relative importance:

- The new computer's compatibility with existing hardware and software
  - = utilization of present, already acquired staff expertise
  - = protection of previous investments
  - = limitation/avoidance of new cost
  - = limitation in required change in existing systems
- Vendor's software support qualifications
  - = extent and quality of available application standard packages/tools
  - = extent to which standard software is being supported
  - = vendor's understanding of client's problems and "environment"
  - = vendor's ability to undertake programming activities, especially modifications in standard software if so required
  - = vendor's interest in and willingness to obtain additional (often overseas) material and software
- Vendor's software support capacities
  - = type of local organization, size of staff
- Vendor's hardware and technical maintenance support including replacement of hardware if not immediately repairable
- Vendor's wish and ability to consider integration with - and in case of existing equipment - the continued use of other vendors' equipment

- Vendor's hardware and software documentation, extent and quality

- Vendor's customer training level, extent and quality

- Compatibility to other leading computer makes, especially in regard to software and datatransfer

- Cost of hardware and software

- Vendor's salesorganisation: Is customer in direct contact or only via dealers? In latter case: Is dealership further split on products?

  The salesorganization often reflects vendor's priority to selling their hardware rather than the most effective solution seen from the customer's point of view.

- Vendor's back-up facilities in case of emergency, e.g. existence of own servicecenter

- Vendor's general policy of continued upwards compatability within own, future (new) computers

- Vendor's market strength and ability to "survive" in an increasing competitive market and thereby ensuring continued support, upgrading and other future technical or software enhancements.

7.5.2 Vendor alternatives for OESB

Based on aforementioned criteria, the following have been considered: IBM, NEC (Nippon Electric Corp.), DEC (Digital Equipment Corp.), Hitachi, Olivetti, Nixdorf, Siemens.

The conclusion being that DIGITAL meets most of the criteria including the most important.

The exclusive distributor in Thailand of Digital computers is Bangkok Data Center, Ltd, 183 Pitsanuloke Rd. In addition to being Digital distributor, BDC is also a leading servicecenter with a total staff about 130.

BDC previously supplied the present PDP 11/23 and has a very good working relationship with OESB. In discussions with the writer, BDC appeared both very qualified and computer professional.

7.5.3 Cost

Based on guiding quotations and estimates from own experience the cost involved will approximate:

Hardware

MicroWAX11:	MicroWax11 including the units/ features marked * in appendix 8:	US$	25.650 c.i.f. BKK
	Additional 2 MB memory	US$	6.180 " "
	Terminals: 5 units, model VT-80, 24 lines, 80 char. Thai language, each abt. US$3770	US$	19.000 " "
		US$	50.830 c.i.f. BKK
	Duty & tax (Import tax, standard tax, business tax), in total 52%	US$	26.430
		US$	77.260 ex BKK
	Voltage stabilizer, 5 kw amp Bht. 50.000	US$	2.000 "
	High quality printer, e.g. Olympia, estimated	US$	2.500 "
	Reserve for possible minor refinements/additions in the final configuration at the time of actual physical implementation	US$	1.600 "
	Miscellaneous: Installation cost, local cables, one-time stationary	US$	1.440 "
	Total estimated MicroVAX cost	US$	84.800 ex BKK
Olivetti PC upgrading		US$	2.200 "
	256Kbyte memory to 640Kbyte US$ 200		
	Attachment of 10Mbyte disk US$ 500		
TOTAL estimated hardware acquisition cost		US$	87.000 ex BKK

Software

System software (operating system) and utilities:

	Programmes and manuals	US$	6000 c.i.f BKK
	Tax and duties 52%	"	3000
		US$	9.000 ex BKK

Application software

The cost depends on the finally selected tools/packages, the subsequent price negotiations with BDC, the need for BDC assistance in implementing the packages (in turn depending on the qualifications of OESB's own (new) systems analyst etc.

After several detailed discussions with BDC (unofficial) it is estimated that assuming using existing Digital and/or BDC corresponding software to extent available, the cost should not exceed Bht 100.000 (US$4.000) with max US$ 6.000-7.000 for specific modifications/additions/initial support.

Training

OESB operating staff training(chapter 7.6.3): Free upto 5 persons.

Additional training: BHT 2.000 per course per person.

Maintenance cost

Hardware maintenance for proposed configuration	US$ 450-500/month
System software maintenance	US$ 60/month

Application software support

If software-service-contract is established there will be a fixed fee per product (programme package), est max 3-4,000 Bht/month.

It is recommended that such contract is established, however, that a summary contract for all products is negotiated.

If software-support-contract is not entered, general concultancy at BDC's own premises is normally free. If on site assistance is needed, the charges are not known at present.

Warranty: BDC's standard warranty period for both hardware and software is 6 months from date of installation.

7.6 OESB'S INTERNAL COMPUTER ORGANIZATION

7.6.1 Functional Requirements

Programming requirements

It is the considered opinion that most - if not all - of OESB's computer applications as proposed in chapter 7.2 can and should be solved via available standardsoftware, especially database management, quiry and updating systems (e.g. Datatrieve).

The actual need for dedicated, highly skilled programming expertise will, therefore, be very limited, especially if a software support contract is established, ref. 7.5.3.

Further, if modifications or additions are needed in said standardsoftware, this would need to be done by DIGITAL (BDC) anyway. Also the vendor often undertakes or assists in loading new softwarepackages, create database structures etc.

Systemsanalyst and - design requirements

The physical implementation of the proposed system will require the very detailed definition and specification of

- the precise data to be stored

- the formatting of said data

- the coding structures to be used

- the precise dataregistration procedures etc.

Following said detailed design, the physical implementation, testing, fileestablishing, documentation, user training etc. also requires extensive systems analyst, design and implementation expertise.

Operating requirements

The physical operation of modern micro - and minicomputers are largely "user controlled", viz activated by the users themselves via workstations.

Central operating requirements are, therefore, limited and covers basically only

- data and file backup

- operation of centralized equipment, e.g. lineprinters

- administer forms and other computer related stationary

- liaison re hardware repair and maintenance

- dataentry: systemsdata and - as relevant - file input data.

7.6.2 Proposed staffing and job descriptions

To ensure a smooth operation with reasonable staff back-up the EDP staffing is proposed as follows:

1 systems analyst, with a background enabling him/her to work 3/4 time on analyst/design/implementation related tasks and 1/4 time on programming related tasks.

1 operator, covering central operations as well as other general computer related tasks.

Proposed Job Description: Systemsanalyst

- The overall responsibility is to implement the OESB information-systems according to the guidelines in this report.

  More specifically:

- to analyse and establish the detailed systems specifications

- to establish required coding structures and numbering systems
- to establish required paperflow, office procedures etc. enabling the new systems to function as efficient as possible

- to liaise with BDC re evaluation, selection and implementation of the precise standardprogrammes/versions to use

- to design required input-and output forms and reports

- to arrange with and continuously liaise with implementing agents and/or others required to submit input data to OESB.

- to establish/ensure preparation and/or delivery from BDC of complete documentation, especially user manuals

- to acquire sufficient working knowledge of all the standard software packages used, especially database quiry and report generating programmes, enabling

  - support to users in their day-to-day work and

  - inspiration to users in using programmes and facilities available to them.

In this connection also to research for and propose to OESB's management and staff the use of existing and/or new analytical and financial planning tools, e.g. spreadsheets.

- to act as backup for operator in the day-to-day operations:

  System start-up/closing down procedures, backup etc.

- to keep management continuously informed of status and problems in implementing the proposed systems.

  In this connection he should actively propose actions and measures to be taken by management to avoid or to remedy problems.

Proposed Job Description: Operator

- the overall responsibility is to ensure the best and continued operating efficiency of all OESB's computer hardware and systems.

  More specifically:

- to operate centralized equipment

- to ensure sufficient stocks of computer printing paper, dataentry forms, ribbons and other computer related stationary.

- to assist users in all their computer related activities e.g.
  - how to operate terminals

  - how to perform dataentry

  - how to perform database quiries

  - how to use new facilities, e.g. in wordprocessing

- to establish the necessary filedata prior to start-up of new systems

- to perform database management = ensure that files/databases [illegible]lly are being updated, correctly and in full, on time

- to assist systemsanalyst as required in preparing testmaterial, complete tests and in other computer related areas as relevant

- to liaise to BDC re hardware maintenance. Follow up on reported repairs

- to undertake and/or ensure the physical requirements re installations of equipment: cables, power, aircondition etc.

- to ensure installation (loading) and testing of new software incl. updates.

  In this connection to follow the publication of new versions of existing utilities in order to enhance operations as relevant and possible.

- to perform and constantly ensure required backup of libraries and datafiles

  In this connection especially ensure that backup copies are kept in a different, fireproof location.

- to act as back-up for systemsanalyst in his possible day-to-day operational duties

- to keep management continuously informed of status and problems in operating the systems after implementation.

  In this connection he should actively propose actions and measures to be taken by management to avoid or to remedy problems.

7.6.3 Computer staff training.

The qualifications of a computer staff is a combination of specific training and experience.

It is recommended that at least the systems analyst but preferably also the operator both have proven experience within their jobdescriptions - if possible from a PDP/VAX environment - beforehand, enabling them to take the practical initiatives and actions necessary to get OESB's computer systems in operation.

The pure technical MicroVAX11 training of the systems analyst and operator is fully covered by BDC's training profile and should minimum comprise:

	Standard duration
VAX11 concepts	3 x 1/2 day
VAX11 operations	5 x 1 "
VAX-VMS utilities and commands	5 x 1 "
System management	5 x 1 "
Datatrieve	5 x 1 "
Specific introduction and training in each system being implemented	as required.

Above training should be undertaken by BDC and will be free of charge for upto 5 persons.

7.6.4 User staff training.

As stressed several times, a fundamental problem so far is the lack of user training.

This area must be given priority in time and funds.
With today's user interactive computing, it is no longer only a question of training the specialized, dedicated computer staff. The users themselves must acquire a basic knowledge and practical (hands on) training. Otherwise any new system is bound to fail.

The user training required is, however, not especially high-level, sophisticated or extensive but primarily to learn the fundamentals as regards:

* Computer and computing concepts (VAX11): How do a computer work. Which units does the installation comprise, functions, principles of operation etc.

* The concepts of a "program" and "data".

* Computer and terminal operations (VAX11): How to make the computer work.

* Computer software. The concepts of
  - operating system functions
  - utility functions and commands
  - compilers
  - application software types
    - standard program packages
    - report generators/writers
    - tailormade programs
    - spreadsheets.
      concepts and function of LOTUS/Symphony for Olivetti and VAX spreadsheets for PDP/MicroVAX11.

* Introduction to the Digital program library. What is immediately available . Where and how to locate required tools.

* User file organization and maintenance

* Specific knowledge of systems in operation and planned/under implementation
  - Datatrieve
  - MAPS
  - Spreadsheets
  - PolyXFER/PolyCOM (datatransfer VAX/Olivetti)
* Datadiscipline. What does datadiscipline comprise. How to obtain and maintain datadiscipline.

* System documentation and user support. Where and how to find further details.
  - Operating manuals
  - Application manuals
  - The BDC support
  - The OESB internal support: Who to ask etc.

* OESB's computer equipment: Types, characteristics, locations

* Practical training/exercises:
  - General terminal operations
  - Database inquiries
  - Spreadsheets: Lotus/Symphony and VAX DECALS, DECGRAPS, DECSLIDE
  - Datatrieve
    - file update
    - output report generation
  - DEC Writer. Report generation.

In principle it might be possible to cover aforementioned subjects via individual subject courses from various vendors: BDC, AIT and others.

However, this will be very timeconsuming, costly and (by being broken down in non-coordinated items) inefficient.

Instead it is proposed that BDC - in cooperation with OESB's own systems analyst and operator (after completion of their own BDC training (ref. 7.6.3) - compose a special seminar for OESB staff covering all subjects. The seminar should be organized with appropriate mixture of theory and practical exercises.

A duration of 2 x 1 week, with an interval, would be considered appropriate.

The total cost for such a seminar preparation and course time has been indicated by BDC not to exceed Bht 35.000-50.000 (US$ 1.5-2.000).

8. ADDITIONAL REQUIREMENTS FOR

SUCCESSFUL COMPUTER OPERATIONS AT OESB

8.1 Organizational clearness and responsibilities

With today's very reliable hardware and standardsoftware, the value and quality of any computer system depends almost entirely on the quality of the data being fed into and stored in the system.

Said data all come from and are all used by the operational units. From this follows that only the user can be responsible for supplying his own input data and defining his own output-reporting needs.

Consequently it is urgently required that OESB clarify it's precise working organization and precise working responsibilities for the individual tasks to be performed within OESB.

In relation to EDP the organization must be clarified as regards:

WHICH	precise tasks must be performed?
WHAT	is the precise contents of each task ?
WHO	is responsible for defining the computer output needs related to each task?
WHEN-WHERE-HOW	is responsible at day-to-day working level for supplying the required EDP input data?
WHO	is responsible at functional management level if above input data are not received by the system?

8.2 Datadiscipline

Lack of "datadiscipline" is often due to lack of above organizational clearness. The term covers, however, also the data-quality aspects:

- that the data are correct

- that the data are complete

- that the data are on time

Most often "datadiscipline" can be related to existing, by the staff wellknown procedures.

In the case of OESB the necessary "datadiscipline" must, however, be created parallel to implementing the new administrative procedures at all, within a new and still growing organization.

Consequently, considerable management attention is required.

8.3 Systems Documentation

In order to ensure operational efficiency by all staff involved and utilization of all systems features to extent possible, all systems must be properly documented.

Normally the "total documentation" is viewed in 4 parts:

a) System description, basically being the master manual containing all system specifications from a design and system functions point of view

b) Programming documentation, containing all programming details

c) User manuals, being an extract or supplementary description of the specific details for the staff's day-to-day operations: which data to register, how to perform the dataentry or inquiries, error messages etc.

d) Operator's manual, covering rules and procedures for the "central EDP operations": Systems start/closing, backup procedures, recovery procedures, utility program details relevant in daily operations, print-form specifications and report distribution etc.

In the case of OESB a) and b) will most likely be covered by BDC's standard documentation. As regards c) and d) the general quideline should be to avoid that any procedure or operation - at least all daily and routine operations - become "person-dependent", viz. based on un-written knowledge/recollections by individuals only.

This will jeopardize safe operations in case of illness, vacation, transfer etc. of the individual involved.

APPENDIX 1

OVERVIEW: ORGANIZATIONAL UNITS, AGENCIES, PROJECTS

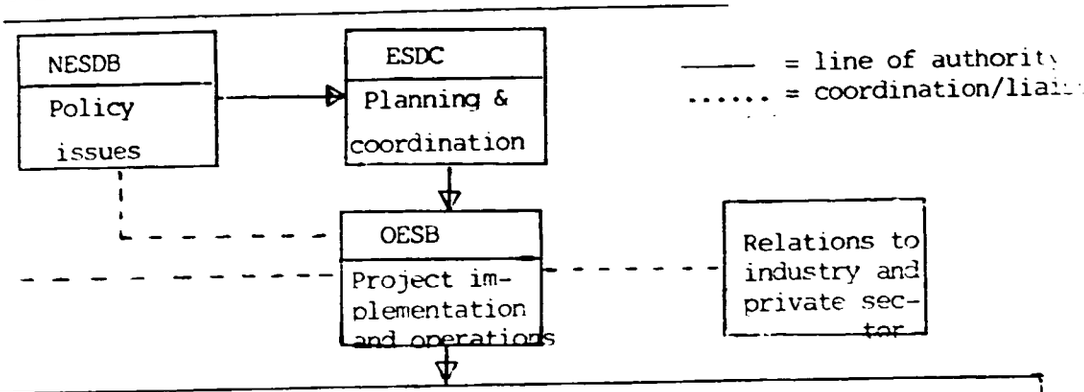

IMPLEMENTING AGENCIES

(Name)	(Location)	(Project)
RID	Rayong	Water Pipe Line .Dokkrai-Maptaput .Maptaput-Sattahib .Nongplalai-Dokkrai
	Chonburi	Water Resource Development . Inter Basin Transfer .Nongko
PWD	Chonburi	Water Pipe Line .Nongko-Lamchabang
SRT	Chachoengsao	Railway .Chachoengsao-Banpachi .Chachoengsao-Sattahib
	Rayong Chonburi	.Sattahib-Rayong .Sriracha-lamchabang
IEAT	Maptaput Rayong	Maptaput Industrial Estate Maptaput Port
	Lamchabang Chonburi	Lamchabang Indudustrail Estate
PAT	Lamchabang Chonburi	Lamchabang Port
TOT	Chonburi	Lamchabang Telephone System
	Rayong	Maptaput Telephone System
CAT	Chonburi	Communication in LCB
	Rayong	Communication in MTP
PEA	Chonburi	Electricity in Lamchabang
	Rayong	Electricity in Mapytaput
NHA	Lamchabang Chonburi	Housing & Community Facility
	Maptaput Rayong	Housing & Community Facility

COORDINATION TO/WITH OTHER GOVERNMENT BODIES/OFFICES

(Name)	(Location)	(Subject Area)
NEC	Bangkok	Policy & Planning Issue for Education & Social Development
Ministry of ED	Rayong	School & College Development
Ministry of IN	Chonburi	Security System
	Rayong	Security System
Ministry of HE	Chonburi	Health & Hospital in Lamchabang Complex
	Rayong	Health ° Hospital in Maptaput Complex
Environment Ofc	Chonburi	Environment Control in Lamchabang Area
	Rayong	Environment Control in Maptaput Area
Ministry of Fin	Bangkok	Funs loan budgets
Budget Bureau	Bangkok	Project Budget administration
DTEC	Bangkok	Foreign technical assistance

APPENDIX 2

DISTRIBUTION OF GENERAL TASK AREAS ON PRESENT STAFF

ACTIVITY	DONE BY (% approximate)																		
	SO VIT	SOM CH ET	MA NAS	A NEK	KAM LOP LAK	PA TAI	PRI DA	MONGI KON	SU RA NAN	PUN CH AI	SOM RIT	CHANI NA PONG	PI TAK	IKRIE ING IKRAI	SIRAI RAT	YES MA NEE	Secret ary Grou
Office admin.																	
.General Admin	100																
.Water Reasource Dev. Admin.		20		48			10			10							
.EBS Admin.		80	20	2		10	10			10							
Planning & Coordinatinal																	
.Social Activity					50					10	75						
.Port			20								5			10			
.Railwey			10								5			40			
.Communications					10					10	5						
.Industrial Estate			20							20				15			
.Water Work system Urban					30			20	20	10	5			5			
.Environment					10						5						
.Industrail Promotion						90											
Supporting Activity																	
.Financing Analysi			20							20		100	70			50	
.EDP															90	30	100
.General & & Secretary										10						20	
.Others in ESB			10			90											
Others (not in ESB)				50			80	80	80				10		10		

APPENDIX 3

OESB's PRESENT DATA-PROCESSING EQUIPMENT

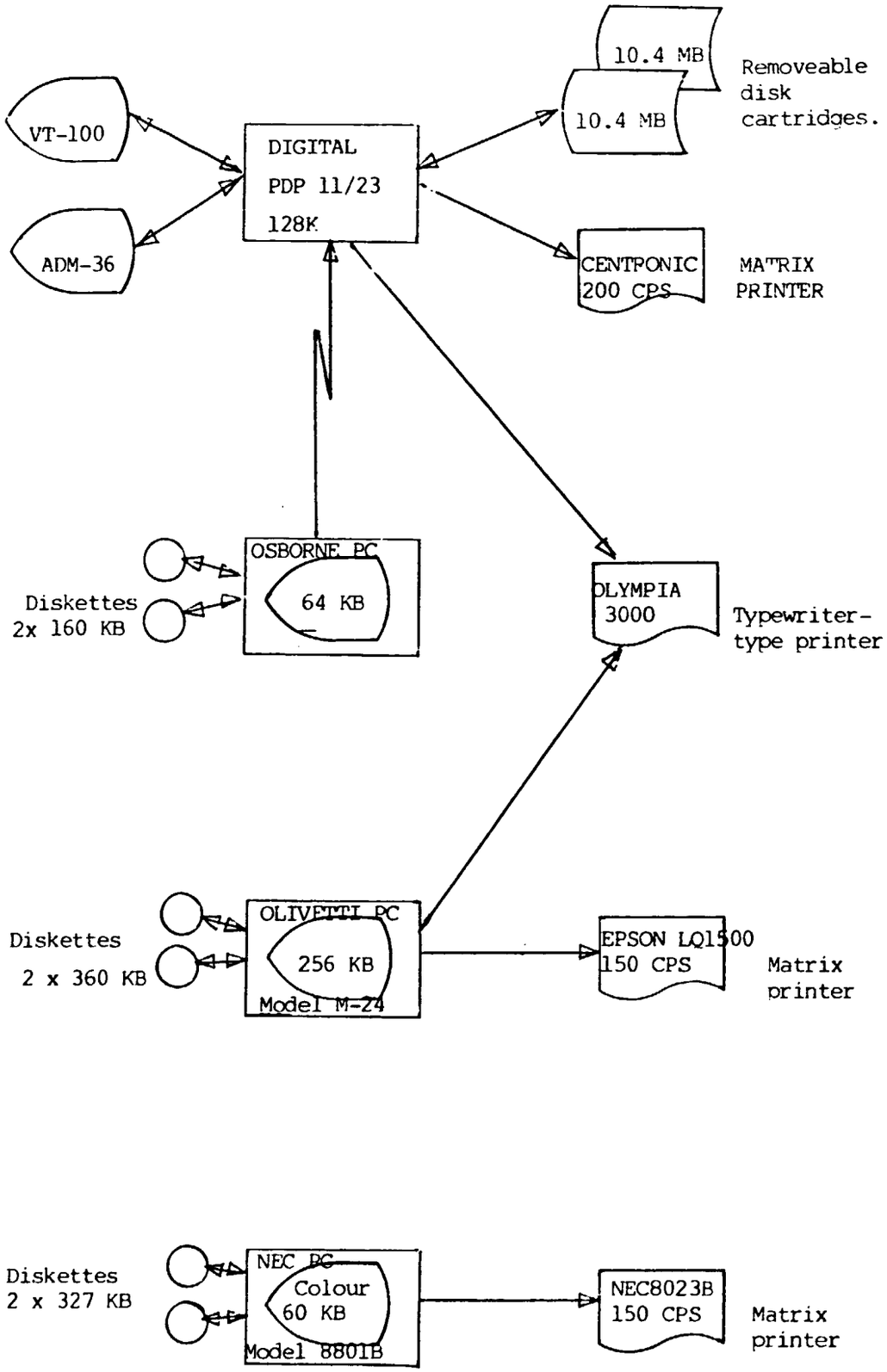

DETAILS ON PRESENT COMPUTER EQUIPMENT

NAME OF VENDOR:	DIGITAL / Bangkok Data Co. Ltd Bangkok

HARDWARE SPECIFICATIONS:

- Central processor	Digital model PDP11/23, 128 KB RAM
- Disk storage	2 x 10.4 Mbyte removeable disk cartridges model RL02.
- Printers	Centronic 353, 200 char per sec.
- Terminal/Displays	VT-100 (Digital) - 1 unit ADM-36, VT-100 compatible, 1 unit
- Diskette units	2 x 500 KB units, 8" diskettes single sided single density
- Tape units	-
- Other units	Serial port for transfer of data from OSBORNE PC to PDP

USED FOR:	EST USAGE PER MONTH	USED BY
Wordprocessing (Lex 11) English	20 hrs per month	Secretary group
Database (Datatrieve) (on water resources)	1 hrs per month or less	Mr Pitak

EST DEGREE OF UTILIZATION:	10 %
EQUIPMENT PURCHASED/LOANED/RENTED:	purchased
EQUIPMENT AGE:	4 yrs
EST. PRESENT VALUE:	max 180.000 (based on 20% write off/yr)

DETAILS ON PRESENT COMPUTER EQUIPMENT

NAME OF VENDOR: OSBORNE I / Union Computer Co. Ltd, Bangkok

HARDWARE SPECIFICATIONS:

- Central processor	Osborne model I, 64 KB RAM, 1 unit
- Disk storage	-
- Printers	none, printing done via Digital PDP11/23
- Terminal/Displays	1, part of the unit
- Diskette units	2 x 160 KB, 5 ¼ " diskettes, double side, double density
- Tape units	-
- Other units	-

USED FOR:	EST USAGE PER MONTH	USED BY
Word processing (WordStar)	2 hrs per month	Mr. Manas Mr. Pitak
Data transfer to PDP 11/23 (Kermit)	Occationally, est .5 hr per month	

EST DEGREE OF UTILIZATION: 5-10%

EQUIPMENT PURCHASED/LOANED/RENTED: aid from Union computer Co

EQUIPMENT AGE: 4 yrs

EST. PRESENT VALUE: Bht 20.000 based on 20% depreciation

DETAILS ON PRESENT COMPUTER EQUIPMENT

NAME OF VENDOR: OLIVETTI / Loxley Bangkok Co. Ltd, Bangkok

HARDWARE SPECIFICATIONS:

- Central processor: Olivetti model M-24, 256 KB RAM, 1 unit
- Disk storage: -
- Printers: Epson LQ1500, 150 char per sec
- Terminal/Displays: 1 , part of the unit
- Diskette units: 2 x 360 kb, 5 ¼", IBM compatible
- Tape units: -
- Other units: -

USED FOR:	EST USAGE PER MONTH	USED BY
Financial analysis (LOTUS)	50 hrs per month	Mr Channerong
Word processing (Wordstar) Thaiword)	50-60 hrs per month	Mr. Pitak and secretary group

EST DEGREE OF UTILIZATION: 80 %

EQUIPMENT PURCHASED/LOANED/RENTED: aid from Loxley Bangkok

EQUIPMENT AGE: 1 year

EST. PRESENT VALUE: 150-200.000 bhrt

DETAILS ON PRESENT COMPUTER EQUIPMENT

NAME OF VENDOR: NEC / DATAMAT Co. Ltd, Bangkok

HARDWARE SPECIFICATIONS:

- Central processor	NEC model 8801B-PC, 64KB Ram, UPD-780C
- Disk storage	-
- Printers	NEC PC 8023B-N, 150 char per sec
- Terminal/Displays	NEC PC-8853B, color monitor
- Diskette units	2 x 327 KB diskettes, NEC standard only, 5 ¼"
- Tape units	-
- Other units	-

USED FOR:	EST USAGE PER MONTH	USED BY
General project analysis (Multiplan)	10 hrs per month	Experts
Word processing (WordStar) (English version)	5 hrs per month	Mr. Pitak and secretary group

EST DEGREE OF UTILIZATION:	10 - 20%
EQUIPMENT PURCHASED/LOANED/RENTED:	aid from JICA, Japan
EQUIPMENT AGE:	2 yrs
EST. PRESENT VALUE:	max 100.000 baht

SOFTWARE USED ON PRESENT EQUIPMENT

TYPE	DIGITAL PDP 11/23	OSBORNE I	OLIVETTI M-2A	NEC 8801B
Operating system	RSX-11M	CP/M	MS DOS	CP/M (NEC versio
Compilors and interpre-tors	Fortran IV Cobol 4 (similar ANS Cobol) Basic compiler	Basic interpreter	Basic interpreter Basic compiler Turbo-Pascal C-compilor Fortran IV	Basic interpreter
Utilities	Lex-11 wordprocessing Datatrieve (Database) PCS-11 Database on water-resources developed by AIT	Uniform software for setting disk format Kermit software for transfer data to PDP 11/23 by cable. Wordstar Dbase II	Lotus Wordstar Thai-word Statpak (Package for statistical analysis Dbase II Dbase III	Wordstar Multiplan Dbase II Dbase III Supercalc II

SUMMARY OF OESB'S PRESENT AND FORESEEN ACTIVITIES

1. GENERAL ACTIVITIES

1.1 MANAGEMENT - STRATEGY - POLICY ACTIVITIES

- 1.11 ESBC relations and secretarial activities
- 1.12 Strategy, policy, priority, target issues
- 1.13 Funds/investment identification and negotiations
- 1.14 Relations to other government bodies and offices incl. NESDB

1.2 INFRASTRUCTURE DEVELOPMENT ADTIVITIES

- 1.21 Land acquisition activities
- 1.22 Liaison and relations to implementing agencies
- 1.23 Forecasting and follow up on infrastructure requirements and capacities e.g. water supply, transportation, housing needs etc.
- 1.24 Preparation and maintaining standards for contracts, tendering, supervision, reporting etc. for agencies and projects.
- 1.25 Preparation and maintenance of pricing structures, charges/ tariffs, pricing/cost recovery principles etc.

1.3 INDUSTRIAL DEVELOPMENT ACTIVITIES

- 1.31 Identification of relevant industries and industrial needs
- 1.32 Industry and private sector relations
- 1.33 Public promotions and marketing activities
- 1.34 Land property administration (sales/lettings)
- 1.35 Industry supporting facilities (activities related to presence of maintenance/repair industries and facilities)

1.4 OESB OFFICE ADMINISTRATION ACTIVITIES

- 1.41 OESB accounting related activities
- 1.42 OESB staff activities and administration
- 1.43 Library, publications, reports (inventory management)
- 1.44 Legal matters
- 1.45 OESB transport matters
- 1.46 Office supplies

2. PROJECT RELATED ACTIVITIES

2.1 PROJECT FEASIBILITY ACTIVITIES

2.11 Project definition, project resource estimation

2.12 Investment appraisal analysis

- financial analysis
- other project analysis (relations to other projects, compatibility to overall programme etc.)

2.13 Funding activities

2.14 Project organisation planning including overall coordination to other projects and involved agencies.

2.2 PROJECT PLANNING AND ORGANIZATION ACTIVITIES

2.21 Project time- and activity planning

2.22 Funds and disbursements planning and scheduling
Completion of project budget

2.23 Establish project control and follow up procedures and schedules.

- time/activity/budget performance (WHAT)
- reporting schedules (WHEN/HOW)
- responsibilities (WHOM)

2.3 PROJECT COMMISSIONING & CONTRACTING ACTIVITIES

2.31 Preparation of tender documents

2.32 Tendering period

2.33 Tender evaluation and selection

2.34 Contracting

2.4 PROJECT DEVELOPMENT/IMPLEMENTATION ACTIVITIES

2.41 Actual follow up of project performance (ref. 2.2)

2.42 Funds allocation activities

2.5 PROJECT OPERATIONS CONTROL ACTIVITIES

2.51 Preparation of agencies' operational plans and budgets

2.52 Follow up of agencies financial plans and results

2.53 Follow up of agencies/projects operational performance

3. WATER RESOURCE CONTROL ACTIVITIES

3.1 Collection of data for water and resource management (in ESB development areas only)

S Y S T E M O U T L I N E S

SYSTEM NAME: Project reference database

SYSTEM FUNCTIONS:

File update, search, edit, VDU display and hardcopy print.

FILE ORGANIZATION:

To allow total flexibility within each project as regards type and extent of reference data to be recorded, the database should be organized as a "textfile", viz. apart from the "key", the remaining part of the project record is considered one formal datafield, however, to be updated via textprocessing facilities.

PROPOSED OUTPUT:

a) All reference data for specific (single) project

b) " " all projects

PRESENTATION:

VDU display or hardcopy print as requested.

DATABASE CONTENTS (minimum):	Key
- Project reference number (ident)	x
- " name	
- Development area	
- Project staffing and organization: Names, locations/adresses, telephone nos., title/functions of all key staff involved in the particular project.	
- Investor/owmership details (project participants) as relevant	
- Implementing/involved agency details	
- Contractor and sub-contractor details as relevant	

DATABASE SIZE (estimate):

est 25 projects x est. 2000 char each = est. max 50.000 char.

SYSTEM NAME: Meeting reference database

SYSTEM FUNCTIONS:

File update, search, edit, VDU display, hardcopy print

FILE ORGANIZATION:

As for "Project reference database"

PROPOSED OUTPUT:

All details for specified meeting or meetings based on selection on

- meeting body: ALL or specified
- date of meeting: specified as > = < date
- Project reference

DATABASE CONTENTS: (minimum)

- Meeting body: NESDB meetings, ESBC meeting, OESB management meeting, Technical steering Committee meetings, agency meetings, Individual project meetings, other formal meetings
- Date of meeting
- Location/place of meeting
- Participants
- Items discussed/agenda
- Conclusions/decisions made
- If official "Summary of meeting" is prepared (is available)
- Date of previous/latest meeting.
  This to ensure retrieval of all meetings. It is assumed that date of next meeting cannot always be fixed beforehand and/or may be changed or cancelled.
- Project reference, in cases where meeting was a specific "Project meeting" or reference to specific project (s) is relevant for further retrieval.

DATABASE SIZE (estimate):

est. 2 per day = 400/year x each max 5000 char x 5 years = est. max 10 mill char

SYSTEM NAME: Land acquisition database

SYSTEM FUNCTIONS:

database update, search, edit, VDU display, hardcopy print

PROPOSED OUTPUT:

Per development area: - all data for specified lot (s)
- all data for all lots

DATABASE CONTENTS: (minimum)	Selection keys:
- Area (Map Ta Put, Laen Chabang, others)	x
- Lot nr	x
- Owner name	(x)
- " address	
- Selling agent (if different from owner)	
- Lot size	
- acquisition date	
- acquisition cost (purchase cost)	
- " status, e.g. if reserved, resold etc.	(x)
- sales document type	
- sales document reference number	

Note: Crop details are not considered relevant for OESB purposes.

DATABASE SIZE (estimate):

3 areas x est 600 lots x each est 100 char = max est 180.000 char.

SYSTEM NAME: Library inventory and reference database

SYSTEM FUNCTIONS:

File update, search, edit, VDU display, hardcopy print

PROPOSED OUTPUT:

All reference data as per search criteria (keys).
If key is specified as ALL, all references for key in question to be displayed/printed.

DATABASE CONTENTS:	Keys
- Publication subject and/or subject group	x
- Project references, for retrieval of specific project literature within subject group.	x
- Restriction code, if reading restricted to certain persons or levels of individuals	
- Publication name	x
- Publication author	
- " date	
- Number of copies	
- Location (s) (from where obtainable)	
- Publication language	
- Brief explanatory note on contents	

DATABASE SIZE (estimate):

est. 2000 publications x est. max 100 char. = est. max 200.000 char.

SYSTEM NAME: Project planning and control system

SYSTEMS FUNCTIONS:

- The database will contain one master record for each project to be controlled by OESB, with contents (datafields) as per "file data" below. The system shall be able to update, search, edit, display and print from the database.
- Each project should be broken down in a number of major activities (assumed max 25 per project), each being a logical "summary" of implementing agency's more detailed activities, e.g. as follows:

Port projects activities:

* Breakwater
* Dredging & reclamation
* Container & break-bulk quay
* Costal shipping quay
* Bulk cargo berths
* Utilities
  - road
  - building
  - drainage system
  - water supply system
  - sewerage system
  - solid waste
  - fire fighting system
  - electrical system

Railway projects activities:

* Land acquisition
* Excavation
* Embankment & filling
* Structures
  - station building
  - bridges
  - rail
* Utilities
  - communication system
  - water supply
  - electrical system

Communication projects activities:

* Land acquisition
* Structures
  - Center building
  - Connection lines
* Utilities
  - Water supply & electrical system

Industrial estate projects activities:

* Land acquisition
* Earth work, e.g. clearing, excavation, bankment etc.
* Pavement work, e.g. subbase, aggrigate base, asphaltic surface treatment etc.
* Foundation work, e.g. piling, retaining wall, pile test etc.
* Structure work, e.g. concrete, reinforcement, steel work etc.
* Plant
  - water treatment plant
  - sewage treatment plant
* Incidentals, e.g. street lighting, road marking, grassing etc.
* Site facility
  - office
  - site laboratories
  transportation

Water systems projects activities:

* Land acquisition
* Raw water pipe line
  - stripping
  - excavation
  - backfill
  - embankment
  - installations (pipe, valve, meters)
* Aqueduct
  - excavation
  - concrete
  - backfill
  - installations (pipe, valve)
* Receiving well
  - excavation
  - concrete
  - backfill
  - gate control station
  - installations (pipe, valve, meter)

Urban area projects activities:

* Site preparation
* Road
* Water supply
* Drainage
* Sewage & waste
* Power supply
* Park & admin. building

Fertilizer plant activities:	)	
	)	to be broken down in
Other infrastructure or industry	)	corresponding "summary" activities
projects to be controlled by OESB:	)	as relevant to each project.

- As soon as the activities and disbursements have been planned, the data should be entered in the project database.

- Whereas the name and number of activities may differ from project to project, it is stressed that the database structure, calculations, and output handling should be exactly the same for all types of projects. Otherwise it may not be possible to summarize reports at levels above individual project.

Update data:

- Data on actual perfor,ance shall be extracted from monthly progress reports from implementing agents and/or site supervisors.

- Considering the relatively limited amount of update data required, estimated at few hundred characters per project per month, the input data registration to update the database will be very limited, expectedly 15-20 minutes only per project.

  Following this it is the considered opinion that any automatic datatransfer sav from implementing agencies will not justify the technical efforts and resulting inflexibility in OESB's own system. Instead the updating of the database may be unduly delayed especially as ad hoc/intermeadiate updating will be impractical.

System output:

- After the monthly update, project status reports should be requested

  by individual project
  by implementing agency
  by development area
  by total ESB programme

- At any time said statusreports can be requested as display or print. However, in the period between two updates, the reports will of course always be based on last progress/payment reporting.

- Reports at level "Individual projects" will contain both time and cost data.
  In case of statusreports at level "Implementing agents" and aforementioned other higher levels the cost can be logically summarized directly.
  Systemwise it is also possible to "link" all projects time-wise.
  This requires that each activity is very clearly defined as regards it's dependancy of other (foregoing) activities.

  In view of
  - that the immediate and day-to-day timeplanning and adjustments are done by the implementing agent in cooperation with the site-supervisors
  - the greatly increased complexity at OESB in keeping the database properly updated
  - that the complete timestatus is easily ascertained via the individual projects status reports (which individual projects of course are and must be constantly updated with required timechanges caused by other projects on which it is dependent)

  it is the opinion that automatic time-summaries above level "individual project" is not included.

FILE DATA ! DATABASE CONTENTS:	Est. max. number of characters
- Project identification (key)	10
- " name	25
- Implementing agency name	15
- Development area	5
Within each project max. 25 individual activities are assumed.	
Per activity the following data should be registered:	
- Activity reference number	25 x 2
- " name (text)	25 x 15
Planned:	
- Time: Duration time (full months)	25 x 6
- Earliest start (month/year)	25 x 6

		Est max char.
- Payments:*) per payment:	Payment date (month/year)	25x25x 6
	Source (local/foreign)	25x25x 1
	Amount (bht)	25x25x 10

Actual:

- Time:	Actual starting time (month/year)	25 x 6
-	" completion time (")	25 x 6
- Payments:*) per payment:	Payment date (month/year)	25x25x 6
	Source (local/foreign)	25x25x 1
	Sub-source: Equity,loan,sales etc.	25x25x 1
	Amount (bht)	25x25x 10

*) note: Assumed max 25 planned and 25 actual payments per activity.

FILE SIZING (Estimate):

- Based on estimated number of characters for each data-element (as indicated above), each project will require max. 22.000 characters.

  With estimated 25 projects the total disk space requirement is 550.000 char.

- It is noted that the number of sub-activities to be controlled by OESB (assumed max 25 per project) can be increased to any higher number if OESB finds it necessary to control a project in greater detail.

  Considering the amount of available disk space, the disk capacity will never become a limiting factor.

MICRO VAX II HARDWARE DETAILS

	BA23(1)	BA23(2)	BA123	COMPACT
CPU	2 MB	2 MB *	3 MB	2 MB
Expansion	upto 9 MB	upto 9MB	upto 9MB	upto 9,B
Floating point	yes	yes *	yes	yes
Disk controller				
RQDX3	yes	yes *	yes	
KDA50				yes
Fixed disk				
RD53		71 MB *	71 MB	71 MB
Maximum		4 x 71MB	3 x 71 MB	2 x 71 MB
RD52	31 MB (maximum)			
Cartridge tape	95 MB (opt)	95 MB *	95 MB	95 MB (opt.)
TK50				
Dual diskette				
RX50, 5 ½"	optional	optional[a)]	400 KB	400 KB (opt)
Magnetic tape				
TSV05	-	-	-	40 MB
Terminal connections (lines)				
Standard	4	4 *	8	8
Maximum	12	12	21	32
Communication control				
DHV11			yes	
DZQ11	yes	yes *		yes
Ethernet local net connection	optional	optional	optional	yes
Price US$ CIF Bangkok excl.terminals	22.915	25.651	35.311	45.075

* units included in price

note a) diskettes on existing PDP11/23 can be attached to BA23

TABLE OF CONTENTS OF MICROVAX11 AND PDP-11 PROGRAM LIBRARY

VAX: VMS

Accounting and Finance

Amcor's Financial Packages 200
BUSINESS INFORMATION SYSTEM..... 200
CDIS General Ledger..... 200
CFMS Computer-based Financial Management System 200
COUNT Integrated Financial System 201
DIGICALC..... 201
FINAR (Financial Analysis and Reporting System) 202
FORESIGHT..... 202
G/L PLUS - General Ledger Information System 202
MANAGEMENT INFORMATION SYSTEM for Professional Service Firms..... 203
MAPS/DB..... 203
MAPS/GL..... 204
MAPS/MICROLINK..... 204
MJA (Multi Journal Accounting)..... 204
MODEL..... 205
NYPLAN..... 205
Project Cost and Accounting Software (PCAS)..... 205
SATURN-CALC..... 206
SUPERCOMP 20..... 206
TOLAS™..... 206
VICS..... 206

Aeromagnetics

AGP (Airborne Geophysical Data Base Package) 36

CAD/CAM

ANVIL-4000 (2D, 3D, NC) 2
ARCHITECTURAL INTERACTIVE DESIGN SYSTEM (2D, 3D)..... 2
BASEVIEW™ (3D) 3
BDS/GDS (ARCH, 2D, 3D)..... 3
BOXER (3D, SOLIDS) 3
CAD2D (2D)..... 4
CADBIRD II (2D) 4
CADRAS (Solids)..... 4
CAE/CAD/CAM (2D, 3D, SOLIDS, NC)..... 4
CAM DES - 2½ CAD System (2D) 5
CAM-X (2D, 3D, SOLIDS, NC)..... 5
CatSolt™ (3D, SOLIDS)..... 5
DESIGN GRAPHIX® (2D, 3D) 6
DIGIPLAN (ARCH, 2D)..... 6
DOGS (Design Oriented Graphics System) (2D)..... 6
DUCT (2D, 3D NC)..... 7
ECAD2 (2D)..... 7
EUCLID (2D, 3D, SOLIDS, NC) 7
Geometric Modeling Software - GMS™ (2D, 3D, Solids) 8
GIPSYS (ARCH, 2D)..... 9
GMOS - Geometric Modelling of Solids (SOLIDS)..... 9
ICM GMS™ (3D, SOLIDS) 9
MEDUSA® (2D, Solids)..... 10
NEXUS/NASCAD (ARCH, 2D, 3D)..... 10
OIR MultiClass/MultiTreeve™ (2D, 3D, DESIGN RETRIEVAL)..... 10
PADL-1.0/n SYSTEM (Part and Assembly Description Language)..... 10
PADL-2 (SOLIDS) 11
PALETTE™ (2D, 3D) 11
PLOT 10 TekniCAD (2D) 11
REPLICORE (2D, 3D)..... 12
ROMULUS (3D, SOLIDS)..... 12
SDRC GEOMOD (2D, 3D, SOLIDS, NC) 12
SYSTRID (3D, NC)..... 12
TWODEE (ARCH, 2D)..... 13
UNIGRAPHICS (2D, 3D, SOLIDS, NC)..... 13

Capacity Planning and Management

Capacity Management System..... 260

Communications/Networks

BURCOM 322
CrossWord..... 322
DN-11 VAX/VMS DEVICE DRIVER 322
DUALEM 322
HASP+ VAX/VMS 323
Micrographics Management System (MMS)..... 324
MS1NET™..... 324
NCNET 324
THE BRIDGE SYSTEM..... 325
TYCHO/HASP..... 325
UltraLink..... 325
X.DOT - X.25 NETWORKING SOFTWARE..... 326
XT (IBM Magnetic Tape Emulator)..... 326

Contouring and Subsurface Modeling

B-MAP™..... 36
BLUEPACK-3D 36
Contouring..... 36
CPS-1/G™..... 37
CPS-1® (Contour Plotting System)..... 37
D-PICT/CONTOUR..... 37
D-PICT/MESH..... 38
GPG/GPC (General Purpose Gridding and Contouring System)..... 38
ISM™ (Interactive Surface Modeling) 38

VAX: VMS (Cont.)

RESIN™ 38
SGL™ (Surface Gridding Library) 39
SLP™ (Seismic Line Processor) 39
SURFACE II 39
SYMAP 40
TERRAPLOT 40
TIN 40
UNIMAP 40
Z-CAP™ 41
Z-EDIT™ 41
Z-MAP™ 41

Data Base Management

AMBASE 207
BASIS 207
CAIRS (Computer Assisted Information Retrieval System) 208
CORTEX APPLICATION FACTORY 208
CUPID 208
DM 209
DRS 209
HABITAT 209
IMPRS (Information Management Processing Reporting System) 209
INFO 210
InFoCen™ 210
INGRES RELATIONAL DATA BASE MANAGEMENT SYSTEM 210
INTAC (Interactive Data Base Management) 211
MAGNUM 211
MDMS (Multiple Data Base Management System) 211
MMS (Micrographics Management System) 211
ORACLE RELATIONAL DATA BASE MANAGEMENT SYSTEM 212
POWERHOUSE 212
QSIMS1 (Multi-User/Multi-File Information Management System) 212
RAPPORT (Relational Data Base Management System) 212
RDM (Responsive Data Manager) 213
RTFILE® 213
SATURN-BASE 213
SEED KERNEL DATA MANIPULATION AND DATA DESCRIPTION LANGUAGES 213
TOTAL DATA BASE MANAGEMENT SYSTEM 214
TRACKER 214

Design Simulation and Test Generation

ABEL™ 76
BIMOS 76
CADAT 77
Chipsmith 77
DIANA 77
DIGSIM 78
ELAN-AC 78
ELAN-LIB (Library of Semiconductor Device Data) 78
ELAN-MOD 78
ELAN-REL 79
ELAN-TR 79
Exert 80
GEMINI 80
HELIX 80
HILO 2 (Logic Simulation and Test Generation) 80
HITAP 81
HSPICE 81
I-G SPICE (Version IV) 81
I/CAP (Interactive Electronic Circuit Analysis Program) 81
I/LOGIC (Interactive Logic Simulation Program) 82
LOGCAP 82
LOGOS III 82
MOSAID 1000 82
MOSFIT 83
PRECISE 83
SCALD Compiler - VAX/VMS 83
SCALD Logic Simulator - VAX/VMS 83
SCALD Timing Verifier - VAX/VMS 84
SEDAN-2 84
SILOS 84
SPICE2, VERSION G.6 84
SUPER*SCEPTRE 85
SUPRA 85
SUPREM-3 86
SWAP 86
TEGAS-5™ 86
TEXSIM/B™ 87
The SIMON SIMULATOR 87
USPICE 87
ZyPSIN I 88

Display Devices

CHROMATICS, Inc.: CM 1024 148
Chromatics, Inc.: CX 1280 148
CHROMATICS, Inc.: CX 1536 148
Evans & Sutherland Computer Corp.: PS 320 151
Evans & Sutherland Computer Corp.: PS 330 151
Evans & Sutherland Computer Corp.: PS 340 151
International Imaging Systems, Inc.: Model 6700 Image Processor 151
International Imaging Systems, Inc.: Model 75 Image Processor 152
Lexidata Corporation: IMAGEVIEW™ 153
Lexidata Corporation: LEX 90™ 153
Lexidata Corporation: SOLIDVIEW™ 153
Megatek Corp.: WHIZZARD® 1645 Design Terminal 155
Megatek Corp.: WHIZZARD® 1650 Design Terminal 155
Megatek Corp.: WHIZZARD® 3300 155
Megatek Corp.: WHIZZARD® 7210 155
Megatek Corp.: WHIZZARD® 7250 155
Megatek Corp.: WHIZZARD® 7255 156
Metheus Corporation: Ω 300 156
Metheus Corporation: Ω 400 Display Controller 156
Metheus Corporation: Ω 440 156
Metheus Corporation: Ω 500 Display Controller 156
Metheus Corporation: Ω 530 156
Selenar Corp.: SG480 (Retrofit Graphics Board for VT100 Series Terminals) 157
Tektronix, Inc.: 4105 Computer Display Terminal 157
Tektronix, Inc.: 4106 Computer Display Terminal 157
Tektronix, Inc.: 4107 Computer Display Terminal 157
Tektronix, Inc.: 4109 Computer Display Terminal 158

Engineering Component Libraries

DIAL - VAX/VMS (Design Interface and Access Library) 128
Integrated Circuit Part Number Index (ICPNI) 128
MIL-DOC/MINI-INDEX 128
TECH-DOC™/MINI-INDEX™ 128

Equipment Maintenance Management

ABC/MM Maintenance Management System 129
CHAMPS 129
IMMS 129
Maintenance Control System (MCS) 130
Maintenance Management Program (MMP) 130

Facilities Design

DRY GAS MODEL 131
GTRAN Transient Analysis of Gas Piping Systems 131
HCOMP™ 131
INTERACT 132
MTRAN™ 132
RTPM 132
TCON 133
TGNET 133

Facility Planning

Facility System Coordinator™ 134
FAMES (Facility Management System) 135
PEAC® 135
PLAN 135

General Civil

CIVIL ENGINEERING LIBRARY 16
COGO (Coordinate Geometry System) 16
COGO (Coordinate Geometry System) 16
EDDIS 17
ENVPLAN 17
GENESYS (General Engineering System) 18
LAND 18
McAuto COGO (Coordinate Geometry) 18
McAuto ROADS (Roadway Analysis and Design System) 18
MOSS 18
SEDIMOT II 19
TISCOGO (Coordinate Geometry with Graphics) 19

General Electronics

217 PREDICT (MIL-Hdbk-217 Prediction Program) 88
IDSP - Interactive Digital Signal Processor 88
PREDICTOR 88

General Manufacturing Resource Planning - MRP II

CMP CONTROL™:Manufacturing 260
Effective Management Systems (EMS) Manufacturing/Distribution 260
IMCS (Interactive Manufacturing Control System) 261
INTEGRATED MANUFACTURING & FINANCIAL SYSTEM 261
INTERACTIVE INVENTORY MANAGEMENT SYSTEM 261
Inventory Control 261
Keane's Factory Information and Financial Accounting Systems 262
MANMAN® Information System 262
MAXCIM™ 262
MCBA®'s MRP II Applications 263
PIOS 263
PRODSTAR-MRP 264
SOURCE/MFG 264
Systems for the Manufacturing Company 264
TEC Manufacturing Systems 265
White Hat Job Shop Management System 265
White Hat MRP II 266

VAX: VMS (Cont.)
Xerox Business Management System..... 266
General Mechanical
AXIAL FLOW COMPRESSOR DESIGN SYSTEM 270
BLINT 270
COMIG 270
DISCOS - A Digital Computer Program for the Dynamic Interaction Simulation of Controls and Structure 270
HYENA (Hydrodynamic Engineering Analysis) 271
MOLDFLOW® 271
NBOD2 - Program to Derive and Solve Equations of Motion for Coupled N-Body Systems 271
NREC TAXIG (Axial Flow Turbine Design System) 271
POLYCOOL 272
PREDM (Multi-stage Centrifugal Compressor Performance Prediction Program) 272
RITDAP (Radial Inflow Turbine Design and Analysis Program) 272
ROTOR (Rotor/Bearing Vibration Analysis) 273
SDRC MODAL-PLUS 273
SDRC SYSTAN 273
STAAF (Stability Analysis of Arbitrary Forms) 273
STEM 274
VAMP (Vibration Analysis and Measurement Processor) 274
VIPACK (Vibration of Blade Packets)..... 275
Geotechnical
EARTH system of programs 19
McAuto SLOPE (Slope Stability Analysis System) 20
ROCKSTARS - Rock Stability Analysis and Research System 20
TAGA Geotechnical Products 20
VANGO CAD 21
Graphics Software
4010C01 PLOT 10 INTERACTIVE GRAPHICS LIBRARY 159
AEDGKS 160
ANALECT DSS GRAPHICS 160
AUTOGANT (Automatic Gantt Bar Chart Program) 160
AUTONET II AND III 161
AXIA Graphics Package 161
BIZPAK 161
BLOX Graphics Builder 161
CALCOMP EXTENDED HOST COMPUTER BASIC SOFTWARE 161
CALCOMP HOST COMPUTER BASIC SOFTWARE (On-Line/Off-Line) 162
CALCOMP SPECIAL SYMBOL SETS 162
CCSI-PLOT® 163
CGS (Color Graphics System) 163
CONTOUR 163
CORTEX Executive Data Display System (CORTEX EDDS) 163
D-PICT/B 164
D-PICT/GKS 164
D-PICT/GRAPHKIT 165
D-PICT/LAYOUT 165
D-PICT/META 165
D-PICT/VGL 165
DATAGRAPH 164
DI-3000 164
DISSPLA™ (Display Integrated Software System and Plotting Language) 164
E Z Chart 166
ENDECODE 166
EZPERT—PROJECT MANAGEMENT GRAPHICS SYSTEM 166
FASTDRAW/3™ 166
FLAIR 167
FORTRAN Support Package 167
FSP 1 (FORTRAN Support Package) 167
GAM 168
GDL 168
GINO-F 168
GK-2000 168
GKS/GRAL 169
GRAFMAKER 169
Graphics-11 169
HCGS 170
IB GRAPH 170
IGOR 171
LOGAN 171
MAPS/GRAPH 171
MAXPLOT 172
MAXVUE 172
MAXWARE CRT SUBROUTINES 172
Metafile 172
Minitab™ Graphics Option 173
OMNIPLOT 173
PADED 173
PLOT 10 GKS (Graphical Kernel System) 174
PLOT 10 Interactive Graphics Library 174
PLOT 10 TCS (Terminal Control System) 174
PLOTSTANDARD-X 174
PLTSAP (Plotting Program for SAPIV) 174
RASPAK 175
RGS 175
SAS/GRAPH® Software 175
SATURN-GRAPH 176
SHADE 176
SIMPLEPLOT Mark 2 176
SPSS Graphics Option™ 176
TELL-A-GRAF™ 177
TEMPLATE 177
TIPLOT (Texas Instruments Plotting) 177
U-CAN-USE BUSINESS GRAPHICS PACKAGE 178
UNIGKS 178
UNIGRAPH 178
UNIRAS 178
Versaplot™ Gray Scale 179
Vista-IPS 179
VistaGDL 179
WAND 180
ZETA FUNCTIONAL SUBROUTINES 180
ZETA FUNDAMENTAL PLOTTING SUBROUTINES 180
ZETA ZCHART 181
Group Technology
DCLASS 248
OIR Automated Time Standards™ 248
OIR GROUP TECHNOLOGY PRODUCTS 248
OIR MultiClass/MultiGroup™ 248
OIR Tool Tracking™ 249
Heating, Ventilation and Air Conditioning
Refrigeration Control System 22
High Frequency Design
SUPER-COMPACT 89
Human Resource Management
CORTEX Human Resource Management System (CORTEX HRM) 215
CYBORG PAYROLL 215
Payroll/Personnel Manager 216
PAYSOLVE (Payroll) 216
Hydrology
HEC 1 23
HEC-2 (Water Surface Profiles) 23
SPIPE 24
IC Layout and Verification
CAL-MP-AUTOMATED STANDARD CELL LAYOUT, SUB-SYSTEM OF THE SL-2000 DESIGN SYSTEM™ 89
DRACULA 90
EPC (Electrical Parameter Check) 90
ERC (Electrical Rules Check) 91
GARDS (Gate Array Design System) - Sub-System of the SL-2000 Design System™ 91
Gate Array Check™ (GAC™) 91
KIC2 91
MASKAP 92
Master Design Language (MDL) 92
MDP (Mask Data Preparation) 92
MEDS® 92
MERLYN-G™ 93
NCC (Network Consistency Check) 93
RCA/AUA (Automated Universal Array Automatic Placement and Routing) 94
RCA/AUTODELAY (Automatic Calculation of Delays in LSI/VLSI Chips) 94
RCA/CADDAS (Computer Aided Design/Design Automation System) 94
RCA/ENLAVE (Enhanced Layout Verification and Logic Checking) 95
RCA/HYPAR (Hybrid Automatic Routing Program) 95
RCA/MP2D (Multiport Two Dimensional Automatic Placement and Routing) 95
Shapesmith PG 95
Universal Design Rule Check™ (UDRC™) 96
Input Devices
ALTEK Corporation: DATATAB® Precision Coordinate Digitizer 181
ECRM, Inc.: AUTOKON 1440 Laser Input Scanner 182
ECRM, Inc.: AUTOKON 2000 Laser Input Scanner 182
EIKONIX Corp.: E-Z SCAN™ Model 4434 183
EIKONIX Corp.: EC 78/99 (Digital Camera System) 182
EIKONIX Corp.: Series 850 CCD Digital Imaging Camera 183
XYZTEK Corporation: Large Format Scanner E-960 183
Inventory Control
Inventory Management Program (IMP) 136
Kinematics
ADAMS (Automatic Dynamic Analysis of Mechanical Systems) 275
DRAM (Dynamic Response of Articulated Machinery) 275
KINSYN7 275

VAX: VMS (Cont.)

Lease Accounting
IPAS/100 (Integrated Petroleum Accounting & Land Management System) ... 43
OGA$ ... 44
Magnetotelluric
ESP/MT ... 44
Mapping and Resource Management ... 44
AGIS ... 45
ARC COGO ... 45
ARC/INFO ... 46
ASPEX ... 46
CALFORM ... 46
DIGIMAP ... 46
DOT MAP ... 46
EMIS ... 47
GDM ... 47
GEOGRAPH ... 47
GEOGRAPHIC DATA SUBSYSTEM (GDS) ... 47
GRAM ... 48
GRID & GRID/TOPO ... 48
INFORMAP II ... 49
MAPPES ... 50
Network ... 50
ODYSSEY Geographic Information System ... 50
PALETTE™ EXPLORER-MAP™ Software ... 50
STRINGS™ (STorage and Retrieval of INformation Graphics) ... 51
WMAP (World Map Plotting) ... 51
Microprocessor Software Development
68000 Cross-Assembler Package ... 97
8086/80136 PASCAL LANDS (Language Development System) ... 97
Backtalk ... 98
BSO/Assembler Microprocessor Relocating Assemblers ... 99
BSO/C Compiler ... 100
BSO/Com-2 ... 100
BSO/Debug Microprocessor Symbolic Debuggers ... 100
BSO/Fmtcnv (Format Conversion Program) ... 100
BSO/Mlib Microprocessor Program Librarian ... 101
BSO/Mlink Microprocessor Program Linker ... 101
BSO/Pascal Compiler ... 101
BSO/PLM Compiler ... 101
BSO/Tekld Tektronix Emulator Loading Program ... 102
COMDS ... 102
Host Communication Utility for DEC VAX/VMS ... 102
iMDX341VX 8086/88/186 SOFTWARE DEVELOPMENT PACKAGE ... 102
iMDX343VX PL/M-86/88/186 CROSS COMPILER ... 103
iMDX344VX PASCAL 86/88 CROSS COMPILER ... 103
iMDX347 C-86/88 CROSS COMPILER ... 103
iMDX371VX 80286 SOFTWARE DEVELOPMENT PACKAGE ... 103
iMDX373VX PL/M-286 CROSS COMPILER ... 103
iMDX391 NDS-II/VAX Link ... 104
iMDX394, iMDX395 Asynchronous Communication Link ... 104
InterC™ & InterPas™ Cross Compiler System ... 104
Micro Concurrent Pascal (mCP) ... 104
Microbench Cross Assemblers ... 105
Microbench FORTRAN-77 Cross Compiler for 8086/8088 ... 105
Microbench INCOMM (PDP-11, VAX to Intel MDS Communication Utility) ... 105
MICROBENCH MICOMM (PDP-11, VAX to Microtek MICE Communications Utility) ... 106
Microbench Pascal for the Intel 8086/8088 ... 106
MICROBENCH SIMULATORS ... 106
Microprocessor Cross-Assemblers ... 107
MicroSET™ File Transfer Programs ... 107
MicroSET™ MDS Communications Program (MDSCOM) ... 107
MicroSET™-80 PL/M-80 Cross Compiler ... 107
MicroSET™-86 C-86 Cross Compiler ... 108
MicroSET™-86 Cross Linker and Locater ... 108
MicroSET™-86 Fortran-86 Cross Compiler ... 108
MicroSET™-86 Interactive Symbolic Cross Debugger ... 108
MicroSET™-86 Macro-86 Cross Assembler ... 109
MicroSET™-86 OH86 Binary to ASCII-Hex Converter ... 109
MicroSET™-86 Pascal-86 Cross Compiler ... 109
MicroSET™-86 PL/M-86 Cross Compiler ... 109
MicroSET™-86 PROM Programmer Communications Utility ... 110
MicroSET™-86 Target Communications Utilities ... 110
MICROTEC C COMPILERS ... 110
MICROTEC CROSS ASSEMBLERS/LOADERS ... 111
MICROTEC META ASSEMBLERS ... 111
MICROTEC PASCAL ... 111
MICROTEC PL-86 ... 112
MICROTEC PROFESSIONAL PASCAL ... 112
MICROTEC SYMBOLIC DEBUGGERS ... 112
MOTOROLA 68000 ASSEMBLY LANGUAGE DEVELOPMENT SYSTEM ... 112
MOTOROLA 68000-FAMILY CROSS-DEVELOPMENT TOOLS ... 113
PIE ... 114
REX-SMA/186 ... 115
REX-TOOLS ... 115
SLICE (Source Language in-Circuit Emulator) ... 116
SOFTPROBE ... 116
Target Prom Communicator ... 116
Target Prom Hex Formatter ... 116
TEKTRONIX 68000/68010 C LANDS (Language Development System) ... 117
TEKTRONIX 68000/68010 PASCAL LANDS (Language Development System) ... 117
TEKTRONIX C-LANDS (8086/80186 C Language Development System) ... 117
TEKTRONIX ColorKey+ User Interface ... 118
TEKTRONIX CROSS ASSEMBLER SUPPORT ... 118
TEKTRONIX ICOM 40 (Integrated Communication Package for Tektronix 8540) ... 118
XDS-68 VAX/VMS Cross Support Development Tools For Motorola 68000cfn (Support 68010 and 68020) ...
Mine Planning
DATAMINE ...
EAGLES - Engineering, Analytic, Geologic and Land Management Evaluation System ...
GEODAS ...
GEOLOG (mining) ...
MEDSYSTEM ...
MINEPAK ...
MINER2 ...
MINESTAR ...
MINEX ...
MINEX (Coal Mine Evaluation System) ...
MULTIPIT ...
N/C Programming
AC/GNC ... 249
ADAPT ... 250
APT IV V3A ... 250
APT ... 250
CAM-PLOT - Tool Path Graphic Plotter ... 251
CAM.FIVE - CAM SOFTWARE PACKAGE OF FIVE ... 251
CAM.SURF - SCULPTURED SURFACES ... 251
NCPRO ... 253
NICAM ... 253
NUFORM, LEVEL I ... 254
NUFORM, LEVEL II ... 254
SDRC HI-PRO ... 254
TEKAPT (NC Tool Software Package) ... 254
UCC-APT ... 254
VIP/80 ... 255
Optical Engineering
ACCOS V™ ... 304
CODE V (Computerized Optical Design and Evaluation) ... 304
PSD OPTICAL ANALYSIS PROGRAM ... 304
Order Processing and Inventory Management
Business Control System (Order Processing, Sales Analysis, Inventory Control) ... 194
CDIS Distribution Management ... 194
DMS-1000 DISTRIBUTION SYSTEM ... 195
MDS-4 ... 196
TOLAS™ ... 196
Output Devices
DATA TECHnology Inc.: MODEL 3454 FLATBED PLOTTER ... 185
DATA TECHnology, inc.: MODEL 4060 FLATBED PLOTTER ... 185
Kern Instruments, Inc.: GP-1 Graphic Peripheral ... 185
Nicolet Computer Graphics Division: ZETA 824 ... 187
Nicolet Computer Graphics Division: ZETA 824CS (Cut Sheet and Continuous-Feed Plotter) ... 188
Nicolet Computer Graphics Division: ZETA 836 ... 188
Nicolet Computer Graphics Division: ZETA 836CS (Cut Sheet and Continuous-Feed Plotter) ... 189
Nicolet Computer Graphics Division: ZETA 8 ... 187
Nicolet Computer Graphics Division: ZETA Sprint ... 189

VAX: VMS (Cont.)
Selenar Corp.: SG120V (Tektronix 4014 Vector to Raster Conversion Using LA120 Printer) ... 190
Uniras Inc.: UNIBOX/232 ... 190
VERSATEC, Inc.: 7000 Series printer/plotters ... 190

PCB Layout, Design and Verification
CADES-G ... 119
SCALD Packager - VAX/VMS ... 120
SCICARDS®/SCHEMACTIVE® ... 120
SECMAI SPCB ... 121

PCB Thermal Analysis
NOTA™ - Nodal Thermal Analysis ... 121
SCITHERM™ CAD System for Thermal Analysis ... 121
Thermax ... 122

Piping and Pressure Vessels
ABAQUS/AQUA ... 310
ADINAP ... 310
ADLPIPE ... 311
DIS (Design Information System) ... 311
FDA5 (Flange Design) ... 311
FLOWNET (Steady Flows in Networks) ... 312
GASSS (GAS Steady State) ... 312
GASUS (GAS Unsteady State) ... 312
NETWK ... 312
NUPIPE-II ... 313
PIPELINE® ... 313
PIPENET ... 313
PIPER ADVANCED PIPE FLOW SIMULATOR ... 314
PIPERUP ... 314
PROPIPE™ ... 314
PSA5 (Pipe Stress Analysis) ... 315
PVE5 (Pressure Vessel Engineering) ... 315
TRI*FLANGE ... 315
TRI*FLARE ... 316
TRI*VESSEL ... 316
TRIFLEX ... 316
WAVENET (Waves in Fluid Networks) ... 317

Power Systems Engineering
CADPAD® ... 306
Power System Analysis (PSA) Package ... 306
PSS/E - Power System Simulator ... 307
SMIDS (Space Modeling and Interference Detection System) ... 307
TRI*STEAM ... 307
WESTCAT™ (Westinghouse Computer-Aided Transmission) ... 308

Pre- and Post-Processing
APES (Automatic Data Preparation and Edits System) ... 276
ASTRO/MOVE ... 276
DISPLAY ... 276
FEMALE ... 277
FEMAS ... 277
FEMGEN ... 277
FIGURES II ... 277
MENTAT ... 278
MOVIE.BYU ... 278
MSC/GRASP™ ... 278
NASTVIEW ... 279
PATRAN™ ... 279
PIGS (PAFEC Interactive Graphics Suite) ... 279
PREMAS ... 279
SASPLT (Structural Analysis System Plotting Program) ... 280
SASPRT (Structural Analysis System Printer Plot Program) ... 280
SDRC SUPERTAB ... 280

Process Control
AIM Supervisor ... 141
Distributed AIM ... 141
FLIC Process Measurement and Control System ... 141
J/PICS ... 142
RCS-7 ... 143
SETCON ... 143

Process Planning
AC/PLAN ... 255
CUTPLAN ... 255
OIR MultiClass/MultiCapp™ ... 256
PLAFOM™ ... 256

Process Simulation and Design
ASPEN PLUS ... 317
CONCEPT ... 317
FLOWPACK-PROCESS SIMULATOR ... 318
FLUENT® ... 318
PROCESS ... 318
TRI*DIST ... 318
TRI*THERM ... 319

Product Planning
ADDATA™ Forecasting System ... 266

Project Management
ASAPMS ... 217
BSO/Planner (Project Management System) ... 217
CPM (Critical Path Method) ... 217
CRAM ... 218
EASYTRAK ... 218
EZPERT—PROJECT MANAGEMENT GRAPHICS SYSTEM ... 218
G/C CUE ... 219
MAPPS (Management And Project Planning System) ... 220
MISTER ... 220
MPMS (Monenco Project Management System) ... 220
PAC II ... 221
PAC III ... 221
PROJECT/2 ... 222
PROMINI ... 222
ProTrakS ... 223
SuperVisor™ ... 223
TOPMAN (Total Planning and Management), Version 2.0 ... 224
TOPS ... 224
TRACK 70 ... 224
TRI*MC ... 224
TRI*ME ... 225
VIS1ON ... 225
VUE (Project Management and CPM Scheduling System) ... 225

Purchasing
Purchase Order Processing ... 267

Quality Data Management
OMS Programs™ ... 144
SPM+/Statistical Process Monitoring System ... 144

Remote Sensing
ATOM ... 55
ELAS ... 55
ERDAS Image Processing and Geographic Information System ... 56
LIRA ... 56
SYSTEM 575 ... 56
System 600 Data Base Management Information System ... 58
System 600 Geographic Technology Modules ... 58
SYSTEM 600 ... 58
VAX/IDIMS ... 58

Reserve Economics
OGRE (Oil and Gas Reserve Evaluation System) ... 6
POGO® ... 6
RAPS®II ... 6

Reservoir Simulation
BETA II ... 6
COMP II and PVT™ ... 6
ECLIPSE FULLY IMPLICIT RESERVOIR SIMULATOR ... 6
THERM™ ... 6

Robotic Systems
Manufacturing Robotic Systems (MRS) ... 257

Schematic Design
DDS-C ... 122
SAFIRS-S ... 123
SDM (Symbolic Drawing Machine) ... 123
SDS (Structured Design System) - Sub-System of the SL-2000 Design System™ ... 123
TEGATE™ ... 124

Seismic Interpretation and Modeling
AIMS III (Advanced Interpretive Modeling System) ... 62
ARIES ... 62
EDIS ... 62
IG3 - Integrating Geology, Geophysics and Geodesy ... 63
IPS (Interpretive Processing System) ... 63
MAP-PAC© ... 63
MIMIC™ ... 63
MODMIG ... 64
ONDO-GRAPHICS ... 64
QUIKRAY™/QUIKSHOT™ /QUIKVSP™ ... 65
RAY-PAC© ... 65
RAYMAP™ ... 65
SIDIS ... 65
SLIPR™ ... 66
SMC (Seismic Data Base System) ... 66
STRAT-PAC© ... 66
VESPA ... 67

Seismic Processing
AURORA ... 67
Green Mountain Refraction Statics Package ... 67

Semiconductor Manufacturing
COMETS (Comprehensive Online Manufacturing and Engineering Tracking System) ... 144
PROMIS™ ... 145

Ship Design, Analysis and Construction
3D LAUNCH ... 281
BLINES ... 281
COMPASS (Computerized Alignment and Analysis of Shaft Systems) ... 281
FORAN ... 282
HULLSURF ... 282
SEAKING ... 282
SEHAM ... 283
VIKING Form ... 283
VIKING Hull Production ... 283

Simulation/Operations Research
ACSL® ... 225
CSM/O/P (Continuous System Modeling & Optimizing Program) ... 226

VAX: VMS (Cont.)

CTRL-C ... 226
DYNAMO III/F ... 227
EASY5 ... 227
FLIGHT ... 228
GPSS/VX ... 229
LAMPS (Linear And Mathematical Programming System) ... 229
LP/MICRO ... 230
LP ... 230
MAP/1™ ... 230
MINI FEED - Feed Formulation System ... 230
RESULTS ... 231
RISKAN ... 231
SEE WHY ... 232
SIMAN ... 232
SIMSCRIPT II.5® ... 232
SIMULA PROGRAMMING LANGUAGE ... 232
SLAM II™ (Simulation Language for Alternative Modeling) ... 233
TESS™ (The Extended Simulation System) ... 233
UCSMP/DCSMP ... 233
VSAERO ... 233

Software Development Libraries

GEOPAK/GEIONT ... 67
GIMAGE ... 68
GPCP/II (General Purpose Contouring Package) ... 68
GPS ... 69
GRAPHLIB ... 69
KRIGPAK ... 69
RASPAK ... 70
SEISPAK ... 70
UNIGKS ... 70
UNIGRAPH ... 70
UNIRAS ... 70

Software Development

AIS-PL/I ... 327
APTools ... 327
CORTEX APPLICATION BUILDER ... 327
EUNICE ... 328
LILA (Language Implementation LAboratory) ... 328
LINDO (Linear INteractive Discrete Optimizer) ... 328
MAINDEBUG™ ... 328
MAINPM™ ... 329
MAINSAIL™ COMPILER ... 329
PascalSET™ PAdapt™ (ADA-Style Extensions To Pascal) ... 329
PascalSET™ PMacro™ (Pascal Macro Preprocessor) ... 329
PascalSET™ PTrace™ (Pascal Trace and Profiler) ... 330
Report Builders-1 (RB-1) ... 330
SB-5 Automated COBOL Applications Software Development System (V3.0-2) ... 331
SOFTOOL® TUTORIALS LIBRARY ... 331
VAX UNITY under VMS ... 332
VIDEO ... 332

Software Engineering

Change and Configuration Control (CCC™) ... 333
DEC/CMS ... 333
DEC/MMS ... 333
DEC/TEST MANAGER ... 333
MIRA, a Computer-Aided Software Engineering Tool ... 333
MOSES Software Development System ... 334
SDP (Software Development Processor) ... 334
SOFTOOL® C Programming Environment (C-PE™) ... 335
SOFTOOL® Cobol Programming Environment (CPE™) ... 335
SOFTOOL® FORTRAN Programming Environment (FPE™) ... 335
Structured Analysis Tools ... 335
SuperPDL ... 335
USE.IT ... 336
VAX Language-Sensitive Editor ... 336
VAX Performance and Coverage Analyzer ... 336

Software Libraries

BCSLIB Math/Stat/Utility Subprogram Library ... 129

Statistical Analysis/Mathematics

Base SAS® Software ... 234
DSS/2 (Differential Systems Simulator, Version 2, Release 3) ... 235
GENSTAT ... 235
GLIM ... 236
IDA™ (Interactive Data Analysis and Forecasting System) ... 236
MGG (Matrix Generator Generator) ... 236
MINI LP-Minicomputer Linear Programming System ... 237
Minitab™ Data Analysis Software ... 237
MLP ... 237
MLR ... 237
RS/1 ... 238
SCICONIC/VM - Mathematical Programming System ... 238
SCSS™ CONVERSATIONAL SYSTEM ... 238
SPEAKEASY ... 239
SPSS-X™ Information Analysis System ... 240
SPSS™ Data Analysis System ... 239
TMS (Table Management System) ... 241
TSA ... 241

Structural Analysis

ABAQUS ... 283
ADINA SYSTEM ... 284
ANSYS® ... 284
ARGUS ... 284
ASAS-H ... 285
ASAS-HEAT ... 286
ASAS-NL ... 286
ASAS-OFFSHORE ... 286
ASAS ... 285
ASKA ... 287
BC (Bridge Construction) ... 24
BEASY ... 287
BOSOR4 ... 288
BOSOR5 ... 288
BOUNDARY ELEMENT COMPUTER TAPE ... 288
CIVILMAP (Civil Engineering CADD System) ... 24
COSMOS ... 288
ESTDES (Elastic Steel Design of Beam-Columns) ... 25
FASST ... 25
FASTRUDL ... 25
FERRET (Finite Element Reduction and Retrieval) ... 289
FIDAP ... 289
FINITE ELEMENT COMPUTER TAPE ... 26
FLASH2 (Finite Element Analysis of SHells—Version 2) ... 289
GLADYS ... 26
GTSTRUDL® ... 27
GTSTRUDL® ... 289
GUYMAST ... 27
HERCULE ... 28
ISOCROS ... 290
LARSA ... 28
LUSAS ... 290
MAGNA ... 29
MARC GENERAL PURPOSE FINITE ELEMENT PROGRAM ... 29
MAST ... 2
McAuto SELOS (Sea Environment Loading on Offshore Structures) ... 2
McAuto STRUDL ... 29
MISES 3 ... 291
MISHEAT 3 ... 291
MODEL (Modular Element Libraries) ... 292
MSC/NASTRAN™ ... 292
MULCON (Multidimensional Heat Conduction) ... 292
NASTRAN®-NASA Structural Analysis System ... 293
NISA ... 293
PAFEC (Programs for Automatic Finite Element Calculations) ... 293
PANDA ... 294
PASCO (Structural Panel Analysis and Sizing Code) ... 29
PATCHES-III ... 294
PISCES ... 295
PLATE ... 29
PLUSH ... 30
SACS ... 30
SAMS ... 295
SAMSAN ... 295
SAPIV (Structural Analysis Program; VAX Version) ... 296
SAS3D (Structural Analysis System—Three Dimensional) ... 296
SCADA (STRUCTURAL COMPUTER-AIDED DESIGN AND ANALYSIS) ... 296
SDRC FATIGUE ... 297
SDRC FRAME ... 31
SDRC SABBA ... 297
SDRC SUPERB ... 297
SEPS ... 297
SHELL ... 297
SPAR (Structural Performance Analysis and Redesign) ... 298
SRAC/SAP7 (Structural Analysis Program) ... 298
STAAD-III ... 32
STAGSC-1 - Structural Analysis of General Shells ... 298
STARDYNE® Structural Analysis System ... 299
STRESS-11 ... 33
STRESSGEN ... 33
STRU-PAK® ... 300
Structural Member Analysis Programs ... 299
STRUDL PRO ... 33
SUPERSAP ... 300
TABS (Three-Dimensional Analysis of Buildings) ... 33
TITUS ... 300
TMG (Thermal Model Generator) ... 300
TPS-10 ... 301
TRI*MAT ... 34
TRI*VEX ... 34
WERCO ... 301

System Programs/Utilities

ACT V4.4 User Control, Accounting and Facility Management Tool ... 336

VAX: VMS (Cont.)

ARSAP—RESOURCE MANAGEMENT AND CHARGEBACK SYSTEM ... 337
BSO/XL ... 337
CATCHIT ... 337
DACS (Data Acquisition and Conversion System) ... 338
EASYENTRY ... 338
ENHANSYS ... 339
ILS (Interactive Laboratory System) ... 339
MAINSAIL™ Runtime System ... 340
PACS (Process Accounting and Chargeback System) ... 341
Pascal-2 COMPILER ... 341
PROJECT V4.4 Control and Accounting System ... 342
QSIMS1 (Multi-User/Multi-File Information Management System) ... 343
Quantum RS ... 343
RECORDS MANAGEMENT SYSTEM ... 343
TAPE V 2.4 Librarian System ... 344
UCL (User Command Language) ... 345
VT100 DATA INPUT PROGRAM ... 346

Text Processing

DI-TEXTPRO ... 242
LASERSCRIPT ... 242
MAINEDIT™ ... 242
MASS-11 ... 243
Plessey-WP ... 243
SATURN-WP ... 244
SUPERSCRIPT™ ... 244
VIRTUAL MEMORY TEXT EDITOR ... 244
WORD-11 ... 245
WordMARC™ Composer (Word Processing) ... 245
WordMARC™ ... 245
ZETA TYPSET ... 245

Warehouse Management

DMS-1500 WAREHOUSE MANAGEMENT SYSTEM ... 197

Well Data Display

BLISTR ... 71
SDL™ (Surface Display Library) ... 72
STRATVIEW™ ... 72
WISP ... 72

Well Log Analysis

ES-LOG® ... 72
INCLINE DIPMETER PROCESSING SYSTEM ... 73
LOGCALC® II ... 73
PETROS ... 73
PROBE™ ... 73
SOLUTION CENTER ... 74
TERRALOG ... 74

Well Planning

WELLPLAN ... 74

Wire-Wrapping Layout

AWRAP ... 124
WWRAP ... 124

Work In Process

SHOP FLOOR CONTROL ... 267

PDP-11: RSX-11M

Accounting and Finance

CFS (Corporate Financial System) ... 200
GENERATION FIVE ... 202
LGFS (Local Government Financial System) ... 203
MJA (Multi Journal Accounting) ... 204
NYPLAN ... 205
SATURN-CALC ... 206
SUPERCOMP 20 ... 206

CAD/CAM

CAD2D (2D) ... 4
CADBIRD II (2D) ... 4
DUCT (2D, 3D NC) ... 7
GINTRAN (Graphics INput and TRANSformation program) (ARCH, 2D, 3D) ... 8

Communications/Networks

BURCOM ... 322
DECMOD ... 322
NCNET ... 324
REAL-AID ... 325
THE BRIDGE SYSTEM ... 325
XT (IBM Magnetic Tape Emulator) ... 326

Contouring and Subsurface Modeling

GPG/GPC (General Purpose Gridding and Contouring System) ... 3

Data Base Management

CAIRS (Computer Assisted Information Retrieval System) ... 2
CUPID ... 2
MDMS (Multiple Data Base Management System) ... 211
ORACLE RELATIONAL DATA BASE MANAGEMENT SYSTEM ... 212
RDM (Responsive Data Manager) ... 213
RTFILE® ... 213
SATURN-BASE ... 213
TOTAL DATA BASE MANAGEMENT SYSTEM ... 214

Design Simulation and Test Generation

ELAN-AC ... 78
ELAN-LIB (Library of Semiconductor Device Data) ... 78
ELAN-MOD ... 78
ELAN-REL ... 78
ELAN-TR ... 79
FLASH (Logic Circuit Simulator for Test Program and Test Diagnostic Generation) ... 79
I/CAP (Interactive Electronic Circuit Analysis Program) ... 81
I/LOGIC (Interactive Logic Simulation Program) ... 82

Display Devices

International Imaging Systems, Inc.: Model 6700 Image Processor ... 151
International Imaging Systems, Inc.: Model 75 Image Processor ... 152
Lexidata Corporation: IMAGEVIEW™ ... 153
Lexidata Corporation: SOLIDVIEW™ ... 153
Megatek Corp.: WHIZZARD® 7210 ... 155
Megatek Corp.: WHIZZARD® 7250 ... 155
Megatek Corp.: WHIZZARD® 7255 ... 156
Metheus Corporation: Ω 300 ... 156
Metheus Corporation: Ω 400 Display Controller ... 156
Metheus Corporation: Ω 440 ... 156
Metheus Corporation: Ω 500 Display Controller ... 156
Metheus Corporation: Ω 530 ... 156
Selenar Corp.: SG480 (Retrofit Graphics Board for VT100 Series Terminals) ... 157
Tektronix, Inc.: 4105 Computer Display Terminal ... 157
Tektronix, Inc.: 4106 Computer Display Terminal ... 157
Tektronix, Inc.: 4107 Computer Display Terminal ... 157
Tektronix, Inc.: 4109 Computer Display Terminal ... 158

Equipment Maintenance Management

Maintenance Management Program (MMP) ... 133

Facility Monitoring

System 600 ... 134

Facility Planning

BAP-I ... 134

General Manufacturing Resource Planning - MRP II

INTEGRATED MANUFACTURING & FINANCIAL SYSTEM ... 261

PDP-11: RSX-11M (Cont.)
Inventory Control 261
SOURCE/MFG 264
White Hat Job Shop Management System 265
General Mechanical
TASVAP (Water and Steam Table) 274
VAMP (Vibration Analysis and Measurement Processor) 274
VISTOR (Vibration—Torsion) 274
Geochemical
QGAS 43
Geotechnical
EARTH system of programs 19
Graphics Software
4010C01 PLOT 10 INTERACTIVE GRAPHICS LIBRARY 159
AEDGKS 160
AXIA Graphics Package 161
CALCOMP EXTENDED HOST COMPUTER BASIC SOFTWARE 161
CALCOMP HOST COMPUTER BASIC SOFTWARE (On-Line/Off-Line) 162
CALCOMP SPECIAL SYMBOL SETS 162
CCSI-PLOT® 163
CGS (Color Graphics System) 163
CONTOUR 163
E Z Chart 166
ENDECODE 166
FLOWGEN F-II 167
FORTRAN Support Package 167
GAM 168
GDL 168
GINO-F 168
GRAFMAKER 169
GSS-KERNEL 169
GSS-PLOT 170
HCGS 170
IGOR 171
PLOT 10 TCS (Terminal Control System) 174
PLTSAP (Plotting Program for SAPIV) 174
RGS 175
SATURN-GRAPH 176
SIMPLEPLOT Mark 2 176
THREE-D/II 177
TIPLOT (Texas Instruments Plotting) 177
U-CAN-USE BUSINESS GRAPHICS PACKAGE 178
Versaplot™ Gray Scale 179
VistaIPS 179
VistaGDL 179
ZETA FUNCTIONAL SUBROUTINES 180
ZETA FUNDAMENTAL PLOTTING SUBROUTINES 180
ZETA ZCHART 181
Group Technology
DCLASS 248
Human Resource Management
PAYSOLVE (Payroll) 216
Input Devices
DATA TECHnology, Inc.: MODEL ALD-2 Digitizer 182
CRM, Inc.: AUTOKON 1440 Laser Input Scanner 182
CRM, Inc.: AUTOKON 2000 Laser Input Scanner 182
IKONIX Corp. E-Z SCAN™ Model 4434 183
EIKONIX Corp.: EC 78/99 (Digital Camera System) 182
EIKONIX Corp.: Series 850 CCD Digital Imaging Camera 183
Inventory Control
Inventory Management Program (IMP) 136
Tool Inventory 136
Mapping and Resource Management
GEOGRAPH 47
WMAP (World Map Plotting) 51
Microprocessor Software Development
BSO/Assembler Microprocessor Relocating Assemblers 99
BSO/C Compiler 100
BSO/Com-1 (Communications between PDP-11 and Intellec or EXORcisor Development Systems) 100
BSO/Com-2 100
BSO/Debug Microprocessor Symbolic Debuggers 100
BSO/Mlib Microprocessor Program Librarian 101
BSO/Mlink Microprocessor Program Linker 101
BSO/Pascal Compiler 101
BSO/PLM Compiler 101
BSO/Tekld Tektronix Emulator Loading Program 102
COMDS 102
Micro Concurrent Pascal (mCP) 104
Microbench Cross Assemblers 105
Microbench FORTRAN-77 Cross Compiler for 8086/8088 105
Microbench INCOMM (PDP-11, VAX to Intel MDS Communication Utility) 105
Microbench IPEX (PDP-11 to ISIS Diskette Utility) 106
MICROBENCH MICOMM (PDP-11, VAX to Microtek MICE Communications Utility) 106
Microbench Pascal for the Intel 8086/8088 106
MICROBENCH SIMULATORS 106
Microprocessor Cross-Assemblers 107
MICROTEC C COMPILERS 110
MICROTEC CROSS ASSEMBLERS/LOADERS 111
MICROTEC META ASSEMBLERS 111
MICROTEC PASCAL 111
MICROTEC SYMBOLIC DEBUGGERS 112
MOTOROLA 68000 ASSEMBLY LANGUAGE DEVELOPMENT SYSTEM 112
PASCAL-2 CONCURRENT PROGRAMMING PACKAGE 113
PASCAL-2 CROSS-COMPILER DEVELOPMENT SYSTEM 114
PDP-11 MICROPROCESSOR CROSS-ASSEMBLERS 114
REX-SMA/186 115
REX-TOOLS 115
SLICE (Source Language In-Circuit Emulator) 116
SOFTPROBE 116
Mine Planning
PEVAL 55
N/C Programming
APPS/2 250
CAMTECH II/Contouring Programming Language 252
NCPPL 253
NCPRO 253
NICAM 253
NUFORM, LEVEL I 254
NUFORM, LEVEL II 254
Output Devices
DATA TECHnology, Inc.: MODEL 3454 FLATBED PLOTTER 185
DATA TECHnology, Inc.: MODEL 4060 FLATBED PLOTTER 185
Kern Instruments, Inc.: GP-1 Graphic Peripheral 185
Nicolet Computer Graphics Division: ZETA 824 187
Nicolet Computer Graphics Division: ZETA 824CS (Cut Sheet and Continuous-Feed Plotter) 188
Nicolet Computer Graphics Division: ZETA 836 188
Nicolet Computer Graphics Division: ZETA 836CS (Cut Sheet and Continuous-Feed Plotter) 189
Nicolet Computer Graphics Division: ZETA 8 187
Nicolet Computer Graphics Division: ZETA Sprint 189
Selenar Corp.: SG120V (Tektronix 4014 Vector to Raster Conversion Using LA120 Printer) 190
PCB Thermal Analysis
NOTA™ - Nodal Thermal Analysis 121
Piping and Pressure Vessels
NETWK 312
Pre- and Post-Processing
FEMALE 277
MESH3D 278
SASPLT (Structural Analysis System Plotting Program) 280
SASPRT (Structural Analysis System Printer Plot Program) 280
TWO-DIMENSIONAL FINITE ELEMENT MESH GENERATOR 280
Process Control
AIM Supervisor 141
SETCON 143
Project Management
CPM (Critical Path Method) 217
PAC I 221
PROMINI 222
TOPMAN (Total Planning and Management), Version 2.0 224
VUE (Project Management and CPM Scheduling System) 225
Purchasing
Purchase Order Processing 267
Quality Data Management
QMS Programs™ 144
Remote Sensing
ELAS 55
ERDAS Image Processing and Geographic Information System 56
Schematic Design
SDM (Symbolic Drawing Machine) 123
Seismic Interpretation and Modeling
SMC (Seismic Data Base System) 66
Simulation/Operations Research
CSM/O/P (Continuous System Modeling & Optimizing Program) 226
DLS (Dynamic Logistics Simulator) 226
ESP (Engineering Simulation Package) 227
GPSSR 229

PDP-11: RSX-11M (Cont.)

KEY CONVERSATIONAL PLANNING SYSTEM 229
LP/MICRO 230
LP 230
MINI FEED - Feed Formulation System 230
UCSMP/DCSMP 233

Software Development Libraries
GPS 69

Software Development
SAL-11 (Structured Assembly Language) 330
SB-5 Automated COBOL Applications Software Development System (V3.0-2) 331
SourceTools 331

Software Engineering
MOSES Software Development System 334
SDP (Software Development Processor) 334

Software Libraries
BCSLIB Math/Stat/Utility Subprogram Library 129

Statistical Analysis/Mathematics
BMDP STATISTICAL SOFTWARE (1983 Release) 234
GLIM 236
MGG (Matrix Generator Generator) 236
MINI LP-Minicomputer Linear Programming System 237
Minitab™ Data Analysis Software 237
MLP 237
MLR 237
RS/1 238
TMS (Table Management System) 241

Structural Analysis
BOUNDARY ELEMENT COMPUTER TAPE 288
ESTDES (Elastic Steel Design of Beam-Columns) 25
FINITE ELEMENT COMPUTER TAPE 26
GLADYS 26
LARSA 28
MISES 3 291
MISHEAT 3 291
MODEL (Modular Element Libraries) 292
PLATE 29
SAPIV (Structural Analysis Program; PDP-11 Version) 295
SAS3D (Structural Analysis System—Three Dimensional) 296
SCADA (STRUCTURAL COMPUTER-AIDED DESIGN AND ANALYSIS) 296
SDRC FATIGUE 297
SDRC SABBA 297
SHELL 297
SPACE FRAME-RM 32
STRESS-11 (RSX-11M Version) 33
STRESSGEN 33
TABS (Three-Dimensional Analysis of Buildings) 33
TPS-10 301

System Programs/Utilities
ARSAP—RESOURCE MANAGEMENT AND CHARGEBACK SYSTEM 337
BSO/XL 337
Pascal-1 COMPILER 341
Pascal-2 COMPILER 341
RECORDS MANAGEMENT SYSTEM 343
SRF (System Reporting Facility) 344
TRACER—FORTRAN DEBUGGING TOOL 344
VT100 DATA INPUT PROGRAM 346

Text Processing
Plessey-WP 243
SATURN-WP 244
TED TEXT EDITOR 244
WORD-11 245
ZETA TYPSET 245

Well Data Display
DHP 71
DOODLE 72

Well Log Analysis
ES-LOG® 72
SOLUTION CENTER 74

Wire-Wrapping Layout
AWRAP 124
LDAT (Logic Design Automation Terminal) 124
WWRAP 124

System/system area, ref. chapter 7.2 / Name of software program/application software tool. (the software can be alternative or mutually supplementary depending on final user specifications)	Systems software and - utilities	Project planning system	Project reference system	Meeting reference system	Library reference/inventory system	Financial analysis etc	Wordprocessing, document writing	Land acquisition database system	Accounting system	Price- and tariff calculation syst	Calc. of facility capacities	Planned/actual utilization follow up	Project performance follow-up
VAX11 VMS operating system	x												
VAX RMS	x												
VAX sort/merge	x												
VAX txt editor	x												
VAX debugger	x												
Kermit - datatransfer	x												
PolyXfer/PolyCom (datatransfer)	x												
DBMS databasemanagement system	(x)												
Data dictionary	(x)												
Fortran compiler	x												
Basic compiler	x												
Cobol compiler	x												
Easytrack		x											
ASAPMS project mgmt system		x											
MAPS/DB		x							x				
ProTrackS		x											
Topman total planning and management syst		x											
Track70		x											
Project/2		x											
VUE - project management and scheduling		x											
MAPPS		x											
Critical path method (CPM)		x											
VAX Datatrieve		x	x	x	x	x		x	x			x	x
DecWriter		x	x	x	x	x		x	x				x

Name of software program/application software tool. (the software can be alternative or mutually supplementary depending on final user specifications) / System/system area, ref. chapter 7.2	Systems software and - utilities	Project planning system	Project reference system	Meeting reference system	Library reference/inventory system	Financial analysis etc	Wordprocessing, document writing	Land acquisition database system	Accounting system	Price- and tariff calculation syst	Calc. of facility capacities	Planned/actual utilization follow up	Project performance follow-up
DeCalc (spreadsheet)						x				x	x	x	x
DeCgraph (graphics)		x				x							x
Nyplan						x			x	x	x	x	x
SuperComp (spreadsheet)						x				x	x	x	x
LEX-11							x						
Word-11							x						
Datamodel (spreadsheet, management syst)						x				x	x	x	x
DataCalc						x				x	x	x	x
Business modeler						x				x	x	x	x
DigiCalc						x				x	x	x	x
Keyword information manager			x	x	x			x					
Stat80						x				x	x	x	x
DeCmail			(x)	(x)	(x)			(x)					
All-in-1 office menu (document process.)							x						
VAXReGis graphics		x				x							
VAX DeC slide (graphics/slides)		x				x							x
Wordstar (Olivetti)							x						
Thai-Word (")							x						
StatPak (")						x				x	x	x	x
DBase II (")						x				x	x	x	x
DBase III (")						x				x	x	x	x
Lotus/Symphony (")						x	x			x	x	x	x

Further details on above and on additional software available refer to:

* VAX Systems and Options Catalog, July-Dec 85, chapter 9.2x-9.3x
* Digital WAX software source book Jan 85
* Digital reference catalog, 3rd edition Nov 85
* [illegible] handbook, chapter 4