OCCASION

This publication has been made available to the public on the occasion of the 50th anniversary of the United Nations Industrial Development Organisation.

DISCLAIMER

FAIR USE POLICY

CONTACT

Please contact publications@unido.org for further information concerning UNIDO publications.

For more information about UNIDO, please visit us at www.unido.org

UNITED NATIONS INDUSTRIAL DEVELOPMENT ORGANIZATION
Vienna International Centre, P.O. Box 300, 1400 Vienna, Austria
Tel: (+43-1) 26026-0 · www.unido.org · unido@unido.org

20352

UNITED
NATIONS
INDUSTRIAL
DEVELOPMENT
ORGANIZATION

REGIONAL AFRICA

REGIONAL AFRICA LEATHER AND FOOTWEAR INDUSTRY SCHEME

US/RAF/92/200/11-06

MISSION REPORT (*)

to ETHIOPIA - July 1993

NALBANDIAN TANNERY

Based on the work of

Mr. G. Clonfero, tannery effluent treatment expert

Backstopping officer: **Aurelia Calabrò**
Agro-Based Industries Branch

* *This report has been reproduced without formal editing*

ABSTRACT

This paper is prepared by Mr. G. Clonfero, UNIDO Tannery Effluent Treatment Expert during a two-week mission in Ethiopia for the project US/RAF/92/200.

The purpose of the mission was:

1. <u>Nalbandian Tannery</u>

To prepare a design for the effluent treatment plant with appropriate fluxgrams, equipment specifications and cost estimates. The design includes sludge handling and disposal.

2. <u>Ethiopian Pickling and Tanning</u>

To prepare a design for the effluent treatment plant (both primary and secondary including the treatment of sludge) with appropriate fluxgrams; to assist in the design and/or adaptation of the civil works for the plant and to prepare specifications for the equipment required with cost estimates.

3. <u>Dire and Wallia Tanneries</u>

To improve the efficiency of the existing systems (including the handling of sludge of tanneries with similar problems.

The expert visited twice all the above listed tanneries with Mr. Seyoum Hailu, National Expert.

During the visits all the data of the proposals have been explained and discussed; the available data have been controlled directly in the tanneries, so that the necessary corrections have been made.

The expert believes that the managers of the tanneries have well understood the proposed technical solutions. The actual problem is represented by the fact they do not know which further action UNIDO will take. It is obvious that until they will know clearly if a UNIDO assistance for the necessary "hardware" will come true, they will not take any decision about the problems. Therefore, it is important that UNIDO shows the intentions about the future development of the project.

TABLE OF CONTENTS

contents.nal

NALBANDIAN T A N N E R Y

Debre Zeit - ETHIOPIA

PRIMARY EFFLUENT TREATMENT PLANT FOR 300 M^3/DAY OF TANNERY EFFLUENTS

1. PROJECT DATA AND OTHER INFORMATION

- Tannery capacity: expected initial production 400 hides and 2,000 skins per day.
  Maximum future production 500 hides and 3,600 skins per day.

- Raw material: dry hides 4.7-5.0 kg/pc
  (12-12.5 kg/pc green weight)
  dry goat skins 0.5 kg/pc
  (1.2 kg/pc ca. green weight)
  wet-salted sheep skins 2 kg/pc
  (2.2 kg/pc ca. green weight).

- Total daily processed raw material: initial 9,000 kg ca. green weight,
  future 14,000 kg ca. green weight.

- Production: initially wet-blue, in future also crust leather.

- Main process: hair saving liming system and chrome tanning (high exhaustion products and chrome recycle methods will be examined for eventual use).

- Work time: 6 days per week (300 days/year), 1 shift (8 hrs per day).

- Water source: Bishoftou lake; two submersible pumps (1 installed + 1 stand-by unit) have been purchased for this factory' service. The pump tested in the real operation conditions gives 300 l/min.

- Expected water consumption:
  - initial 180 m^3/day (max. 200 m^3/day),
  - future 280 m^3/day (max. 300 m^3/day) (*)

  (*) factory's data.
  These figure give a water consumption of 20 (max. 22) l/kg of raw material green weight.

- Total area available: 22,000 m^2 (50% ca. outside the factory'fence).

- Tannery location: suburban area (approx. distance from the residential area 1 km ca.).

- Final recipient body: on the surrounding land surface (see Note 1).

- Limits for discharge: presently, no definite standards exist.

Note 1
There are no surface waters or a sewer into which to discharge the treated effluent. The direct discharge into the lake is out of question and, therefore, the disposal onto the soil (irrigation or infiltration/evaporation) is the one possible alternative.

2. PROPOSED EFFLUENT TREATMENT PLANT

Forward

The expert's technical proposal has been based on the following assumptions:

i. the tannery will adopt the hair saving liming process followed by the hair removal by filtration. This fact will remarkably reduce the solids, organic load and sulphide content of the effluent to be treated.

ii. the rain waters are separately discharged (they are not sent to the ETP).

iii. at the moment a specific regulation about the separate treatment of chrome effluents does not exist in Ethiopia, but it may be imposed in future because of the trend in East African countries to request it and to make difficulties for the disposal of chrome containing sludges.
In the expert's opinion, a separate pre-treatment of the Chrome effluents is in any case necessary. Neither the use of the spent tanning liquor for the preparation of the picking bath nor the high exhaustion techniques (these are the possible methods that the tannery would eventually to adopte) can guarantee a final content of trivalent chrome lower than 500 mg per kg of dry sludge (as normally requested by the environmental regulations for the use of the sludge in agriculture).

iv. because of the land slope, both the chrome pre-treatment and the general treatment unit can be fed by gravity (an initial pumping station is unnecessary).

v. in the expert's opinion, the here proposed disposal of the final effluent (and the residual chrome free sludge ?) onto the soil (irrigation/fertilization) does not justify high level treatments. The installation of a secondary (biological) treatment has been so estimated unnecessary and the same flocculation with chemicals before the primary sedimentation has been proposed for security reasons more than for technical exigencies.

2.1 Brief description of the treatment process (see also the annexed flux-gram)

The tannery effluent are discharged into two separate gullits: line 1 and line 2 (beamhouse and tanning departments respectively).

2.1.1 Pre-treatment of Chrome wastes

The chrome effluent are discharge in the line 2 and after screening (bar screen MS) piped by gravity into the chrome storage and precipitation tank (1).
The chrome precipitation is carried out in batch. When the tank 1 is full, the mixer MX is switched on and lime-milk manually added to reach a pH of 8-9 (the final pH is checked with a paper indicator). The trivalent chrome is quantitatively precipitated as hydroxide at this pH. The mixer is switched off and the quiet liquor releases the solids. The minimum period of quiet is 4 hrs ca. but an overnight sedimentation is recommendable.
Ultimated the sedimentation, the supernatant (virtually chrome free) is pumped (submersible pump P1) into the tank 3 for being mixed with the other effluents. After the supernatant draw-off, the chrome hydroxide sludge are trasferred to the sand drying beds for de-watering. This operation is done by means of the same pump P1 lowering it to the bottom of the precipitation tank. The operator must only take care that during the pumping of the supernatant no chrome flocks are carried out.

Note 2: the complete cleaning of the tank 1 from sludge is not necessary, any eventual chrome hydroxide residue will be (statistically) eliminated in the successive cleaning operations.

2.1.2 Hair recovery from liming

The liming process is done into paddles both for skins and hides. The choice of the hair unpulping system (both process and chemicals) must be done by the same technicians of the factory. The hair saving is mandatory in order to achieve the best results with the successive screening phase.
During the liming (generally an hour after the dosage of the sulphide) part of the bath is send by gravity trough an over-flow of the paddle to fine screen. The "hair-free" liquor flows into a pit and is recycled back by a submersible pump to the departure paddle.

The filtration/recycle process is continued for 2 hours ca., period necessary in order to achieve a statistical removal of the total hair contained in the paddle.

2.1.3. General treatment

The chrome free waters and the other tannery effluents after screening (manual screen MS) are piped by gravity into the equalization and sulphide oxidation tank 3.
The tank 3 is mixed and aerated by two Venturi ejectors (EJa/b)
The dosage of $MnSO_4$ has been estimated non-essential. If necessary, it can be easily done adding the catalyst solution manually. This dosage may be done twice: 50% of the chemical immediately after the liming discharge and the remaining 3-4 hours later.
The aerated effluent is then pumped (submersible pump P2) to the flocculation tank 4. The inlet flow in 4 can be regulated by means of a by-pass valve V1 that recycles the excess water again into the tank 3.
The control of the flow simplifies the primary sedimentation design and the flocculation treatment with chemicals.
The chemicals used in the flocculation are Alum and Polyelectrolyte. This treatment is very flexible and the dosage of chemicals can be adjusted (and even not used) according to the real future necessities and practical results.
The chemicals are dosed in water solution by means of two dosing pumps that operate simultaneously with the main pump P2.

The flocculated liquor flows by gravity into the primary sedimentation tank 5 (Dortmund type) where suspended solids settle in the sloped bottom and the clear supernatant is discharged by the upper over-flow channel.

The supernatant from 5 flows by gravity into the storage lagoon 6.
The treated water is finally pumped and to the area to be irrigated.

3. SLUDGE Treatment

The sludge from the primary sedimentation tank is pumped by a helicoidal pump to the storage tank 7.
The pump is driven by a timer that is programmed to maintain the correct blanket level in the sedimentation tank and transfer a properly thickened sludge.
The sludge is finally disposed of by means of a small tank-truck for farming. The number of daily travels is depending on the total volume of the sludge to be transported and, of course, on the capacity of the tank-truk.

In the future, if new local regulations will veto or limit this method of disposal, other alternatives must be evaluated.

a. sand drying beds

The installation of drying beds must be carefully evaluated: it may affect negatively the area (aesthetic and bad smell problems).
In the case the sludge from the primary sedimentation tank will be directly pumped to the drying beds (the storage tank 7 becomes unnecessary). The filtration water should be collected and piped into the tank 6.

b. filter press

The mechenical sludge dewatering is technically the most reliable alternative but it requires enough high installation costs.
In this case the sludge stored in the tank 7 will be pumped to the filter-press. A previous conditioning of the sludge (lime-milk to pH 10 ca.) could be necessary for improving the sludge dewatering process.
The final sludge cake (30-35% of solids) must be anyway eliminated (transported and disposed of). Is evident that the handling of a solid sludge is easier also in the case of use in agriculture.

4. LIST AND INDICATIVE PRICE OF THE EQUIPMENT

4.1 Air removal from liming liquors

4.1.1 n. 1 Self cleaning fine screen (to be imported: Idrascreen, Italprogetti, Sernagiotto or similar)
Characteristics:
- filtration bars with trapezoid section;
- spacing 750 microns;
- capacity 600 l/min. ca.;
- dimensions of filtrating drum : diameter 632 mm, length 900 mm.

Materials:
- frame in stainless steel AISI 304;
- drum, bolts in stainless steel AISI 316;
- rotating brush: special rubber and AISI 304;
- sealing devices : Teflon^{r}, polypropylene H.D.;

Filter is complete of feeding tank in AISI 304, drum washing device and overflow.
Electric motor with motovariator of 0.75 kW, 380 V, 50 Hz, protection IP 55.

Price: 18,400 U.S.$

4.1.2 n. 2 Submersible pumps (1 installed + 1 stand-by unit) suitable for water with high content of suspended solids (to be imported: Flygt CP 3085, ABS or similar).
Open channel impeller with 76 mm free passage.
Perfect insulation between motor and hydraulic system by means of two mechanic seal working indipendently.

Materials:
- pump body and impeller in cast iron;
- shaft, nuts and screws in stainless steel AISI 420;
- mechanical face seals in ceramic for abrasive liquids.

Characteristics:
- capacity 1,000 l/min. at 4 m head;
- electric motor of 2 kW, 380 V, 50 Hz, 4 poles, insulated to F class.

Total Price: 5,800 U.S.$

4.1.3 n. 1 Electrical panel for the hair filtration unit and the recycle pump for the filtered liquor .
Complete of main switch and operation/control components of all the electro-mechanical parts of the plant.
Board executed according to European standards for indoor installation.

Price: 800 U.S.$

Subtotal Section 4.1: Total indicative price: 25,000 US $

4.2 Pretreatment of chrome wastes and primary treatment

4.2.1 n.2 bar screens, sloped 60°, in steel to be manually cleaned.
Characteristics :

- bar diameter	:	8-10 mm;
- spacing between bars	:	7-10 mm;
- width	:	50 cm;
- length	:	70 cm;
- capacity	:	50 m^3/h ca.

The screen is equipped with cleaning rake.

To be provided locally (*)

(*) the expert provided the factory with a sketch illustrating these screens.

4.2.2 n.1 mixer for the mixing of the chrome precipitation tank (Antico Olindo - Italprogetti or similar).
Materials:
- shaft and paddles in stainless steel AISI 304.

Characteristics :

- shaft length	:	100 cm ca.;
- shaft speed	:	300 r.p.m. ca.;
- installed power	:	2.2 kW, 380 V 50 Hz 3 phases.

The motor is coupled with a vertical gear box, coaxial type with oil lubricated gears.
The mixer is complete with frame in hot galvanized steel for the installation on the concrete tank.

Price : 2,500 U.S.$

4.2.3 n.2 **submersible pumps**, (1 installed + 1 stand-by unit) for waste water with high solid content (Flygt D45 - ABS or similar).
Body and propeller in cast iron with rubber paint, shaft, studs and nuts in stainless steel AISI 420.
Characteristics :
- 1.1 kW motor 380 V 50 Hz 3 phases 4 poles insulated to F Class;
- vortex impeller with solid passing of 50 mm diameter;
- capacity 400 l/min. at 4 m head.
- weight 30 kg ca.

The pumps are equipped with the 90°curve, connection for the flexible pipe, base stand and strainer cable.

Total Price : 2,000 U.S.$

4.2.4 n.2 **Venturi ejectors** (Flygt Flo-get FG 112-31 or similar).
Each consisting of a submersible pump CS 3102 MT 430 and an ejector Mod. 4812.
Characteristics :
- 3.1 kW motor 380 V 50 Hz 3 phases 4 poles insulated to F class;
- an ejector Mod. 4812 100 mm diam. length 1.010 mm with nozzles of 63 mm diameter and 4 m snorkel for the air suction;
- oxygen transfer 4 kg/h ca. at standard conditions.

Materials:
- pump's mechanical face seals with tungsten carbide seal rings for continuous operation.
- Venturi tube and snorkel in stainless steel AISI 304, nozzle in plastic material.

Total Price: 11,000 U.S.$

4.2.5 n.2 **submersible pumps**, (1 installed + 1 stand-by unit) for waste water with high solid content (Flygt CP 3085 - ABS or similar).
Body and propeller in cast iron with rubber paint, shaft, studs and nuts in stainless steel AISI 420.
Characteristics :
- 2.2 kW motor 380 V 50 Hz 3 phases 4 poles insulated to F Class;
- vortex impeller with solid passing of 80 mm diameter;
- capacity 800 l/min. at 4 m head.

The pumps are equipped with bar guides, connection for the outlet pipe, base stand and strainer cable.

Total Price: 5,800 U.S.$

4.2.6 n.2 dosing groups for preparation and dosage of the solutions of chemicals (Alum and Polyelectrolyte), (OBL - Dosapro - Italprogetti or similar).
Each consisting of:

<u>reservoir in polythene</u>, 1,000 litres capacity, complete of support for the installation of the mixer and dosing pump.
Approx. dimensions:
- diameter 1,100 mm;
- height 1,230 mm;
- feeding hole 200 mm diameter.

<u>mixer</u> for the dissolution, shaft and paddles in stainless steel AISI 304.
Characteristics:
- 0.35 kW motor 380 V Hz 3 phases protection IP 55;
- vertical speed reducer, coaxial type with oil lubricated gears;
- shaft speed 200 r.p.m. ca.

<u>dosing pump</u> (Alum and Polyelectrolyte) body in PVC, plunger in ceramic and no-return valves in stainless steel AISI 316.
Characteristics:
- 0.2 kW motor 380 V 50 Hz 3 phases protection IP 55;
- capacity variable from 0 to 100 l/h;
- maximum working head 2.5 bars.

Total Price: 6,600 U.S.$

4.2.7 n.1 series of accessories for 5 x 5 m square sedimentation tank in concrete, type Dortmund, (Italprogetti or similar).
Consisting of:
- 2 m length influent well of 50 cm diameter in polypropylene;
- overflow weir for supernatant in stainless steel AISI 304;
- support frame in hot galvanized steel with walk-way and parapets according to accident-prevention standards;
- service ladder 3 m length in hot galvanized steel;
- inlet and outlet pipes 100 mm diam. in hot galvanized steel to be imbedded in the tank walls;
- flexible connections in PVC 100 mm diam.;
- sludge draw-off pipe 80 mm diam. in hot galvanized steel to be embedded in the tank wall.

Price: 3,700 U.S.$

4.2.8 n.2 helicoidal pumps, screw pump type Mohno
(1 + 1 stand-by unit); (Allweiler SEP 100 or similar).
Materials:
- body in cast iron,
- rotor in hard chromium plated steel,
- stator in synthetic rubber.
The pump is coupled through a speed reducer to a 2.2 kW, 380 V, 50 Hz, 3-phases motor protection IP 55.
Other characteristics :
- rotor speed 300 r.p.m. ca.;
- capacity 4 m /h at 20 m head.
The pump is installed on a frame in hot galvanized steel.

Total Price: 8,300 U.S.$

4.2.9 n.1 mixer for the lime-milk preparation, (Antico Olindo - Italprogetti or similar).
Materials:
- shaft and paddles stainless steel AISI 304.
Characteristics :
- 1.1 kW motor 380 V 50 Hz 3 phases protection IP 55;
- vertical speed reducer, coaxial type with oil lubricated gears;
- shaft speed 400 r.p.m. ca.;
Complete with support frame in stainless steel AISI 304 for the installation of the preparation tank in concrete.

Price: 2,400 U.S.$

4.2.10 n.1 centrifugal pump, (Robuschi - Mencarelli or similar).
Materials:
- body and propeller in stainless steel AISI 304.
Characteristics :
- 0.3 kW motor 380 V Hz 3 phases protection IP 55;
- capacity 50 l/min. at 5 m head.

Price: 1,500 U.S.$

4.2.11 n.1 control board for the operating and control of all the electrical equipment of the E.T.P.
The control board is designed in accordance with the standards of the European Electricity Committee.
The board is made for the installation under a covered area.

Price: 6,800 U.S.$

4.2.12 -- piping :
pipes, valves and fittings for the hydraulic connections of the E.T.P. and sludges drying beds.
The materials (PVC, steel, polythene, etc.) and the sizes are different according to the characteristics of the piped product and the required flow or head.

Total Price: 5,000 U.S.$

4.2.13 -- **electrical wiring :**
cables of different sections and accessories for the connection and/or control of the electrical equipment of the E.T.P. including installation/clamping devices with the exclusion of the main line from the tannery's power station to the control board.

Total Price: 4,500 U.S.$

Subtotal Section 4.2: Total indicative price: 60,100 US $

4.3 **Mechanical dewatering of the sludge (OPTIONAL)**

4.3.1 n.1 filter press for the sludge filtration (to be imported: Diefenbach, Italprogetti, or similar).
Materials:
- steel frame with corrosion proof painting,
- plates and filtering clothes in polypropylene.

Characteristics:
- plates dimensions 800x800 mm.
- filter frame max. capacity 60 plates.
- number of installed plates 60
- total filtering surface 24 m^2 ca.
- volume of the cake 900 liters ca.

Hydraulic closure of the filtering plates by oil-power and double-acting plunger.
Installed power of the hydraulic closure 1.1 kW ca.
Manual displacement of the plates.
The filter is complete of high pressure feeding pump of a capacity of 5 m^3/ h (installed power 3 kW ca.) and electric control board.

Subtotal Section 4.3: Total indicative price: 70,000 US $

4.4 -- **spare parts:**
the main spare parts for two years of plant operation represent approximately 15% of the price of the main equipment (i.e. with the exclusion of price for the optionals, hydraulic piping, electrical wiring, reservoirs and metallic structures).

Subtotal Section 4.4: Total indicative price: 6,000 US $
(without mechanical sludge dewatering)

Subtotal Section 4.4: Total indicative price: 10,000 US $
(with mechanical sludge dewatering)

4.5 packing & freight

4.5.1 -- **packing:**
packing in standard wood cases to be shipped inside a 20 foot container.
Price: 500 U.S.$

4.5.2 -- **freight:**
FOB Italian port
Price: 800 U.S.$

4.5.3 -- C & F Ethiopian port (by surface)

Price: 2,500 U.S.$

Subtotal Section 4.5: Total indicative price: 3,800 US $

4.6 -- **supervision at equipment installation**
n.1 foreign technician for 15 days, assisted by local labour supplied by the recipient company:

- fee: 6,000 U.S.$
- D.S.A. (100 U.S.$/day): 1,500 U.S.$
- travels (international air ticket): 2,400 U.S.$

Subtotal Section 4.6: Total indicative price: 9,900 US $

4.7 -- **start-up of the ETP and training**
n.1 foreign technician for 15 days, assisted by local personnel of the recipient company:

- fee: 6,000 U.S.$
- D.S.A. (100 U.S.$/day): 1,500 U.S.$
- travels (international air ticket): 2,400 U.S.$

Subtotal Section 4.7: Total indicative price: 9,900 US $

GRAND TOTAL EQUIPMENT AND ACCESSORIES
(without mechanical sludge dewatering):
114,700 U.S.$

GRAND TOTAL EQUIPMENT AND ACCESSORIES
(with mechanical sludge dewatering):
188,700 U.S.$

5. CIVIL WORKS

5.1 Pre-treatment of Chrome wastes

5.1.1. Pit for the installation of the bar screen:
lateral wall in blocks bedded in cement mortar and lean concrete bottom with plastering of the internal surface.
Internal dimensions: cm 100 x 50 x 50 h ca.

5.1.2. Precipitation tank:

Expected max. volume of the chrome wastes: 24 m^3/day (*)
- total volume 30 m^3 of the proposed tank (useful 25 m^3 ca.).

Indicative dimensions: 3.5 x 3.5 x 3 h metres (useful height 2.5 m ca.).
Completely underground construction (the tank must be fed by gravity) with 15-20 cm of external board (above the ground level) to avoid stones or other solids to enter.

(*) The expert has considered a total safety volume (tanning, retanning and wet-blue pressing waters) of 200% on the green processed weight; i.e. 14,000 x 2 = 24 m^3.

5.2. General effluent treatment

5.2.1. Pit for the installation of the bar screen:
lateral wall in blocks bedded in cement mortar and lean concrete bottom with plastering of the internal surface.
Internal dimensions: cm 100 x 50 x 50 h ca.

5.2.2. Equalization tank:
Tank type ditch with lateral and bottom walls in reinforced concrete 30 cm thick. Useful volume 300 m^3 ca.
Internal longitudinal wall in blocks bedded with cement mortar and reinforced with steel bars 8 mm diam. placed every 0.8 m and surface plastering.
Internal dimensions:
- ditch : width 7 m
  length 17 m (r = m 3.5)
  height 3.5 m (max. water level 3.0 m);
- longitudinal wall : length 10 m
  height 3.5 m

The tank must be equipped with two walkways in concrete for the installation of the Venturi ejectors.
Partially underground tank.

5.2.3. Primary sedimentation tank:
square surface tank in reinforced concrete, walls 30 cm thick ca.
Pyramidal bottom sloped 60°.
Internal dimensions:
- square tank 5 x 5 m
- vertical wall: height 2.0 m
- pyramidal part: height 4.2 m.

Total volume 85 m^3.
The tank is partially underground.

5.2.4. Storage lagoon for the primary treated effluent:
lateral walls and bottom in natural ground.
Height of the lateral walls: 0.8 m ca.
Capacity: 500 m^3 ca.
Indicative dimensions: 60 x 10 m.

5.3 Sand beds for sludge de-watering

5.3.1. Chrome sludge drying beds:
lateral walls 20 cm thick in blocks reinforced with steel bars 8 mm diam. placed every 60 cm and connected with the bottom r.c. plate and r.c. tie beam at summit level. The internal surface is finished with plastering.
Number of beds: 2.
Surface dimensions: m 4 x 8 per bed
Average height: 1 m.
The filtering surface is constituted of :
- cm 10 upper layer of sand 0.3 - 0.6 mm;
- cm 10 middle layer of crushed stone 15 - 20 mm;
- cm 10 lower layer (average height) of crushed stone 40 - 80 mm.

5.3.2. Sludge drying beds:
these beds are identical to those for Chrome sludge but with a surface dimensions of 6 x 10 m.
Number of beds: 8.

5.4 Covered area

for the installation of the general control panel of the electric equipment of the plant and the dosing units, and for the storage of the chemicals used in the effluent treatment.
Six steel columns and five upper beams of rectangular hollow section of mm 100 x 100 x 4 support the roof covering made with corrugated iron.
Indicative dimensions: 3,5 x 10 m, height 4 m ca.

6. OPERATION PARAMETERS OF THE ETP

Design data:

- Effluent volume:	300 m^3/day
- Discharge period:	8 hrs/day (8 a.m. - 6 p.m.)
- Average discharge flow:	37.5 m^3/h (300 : 8)
- Peak factor (adopted):	2
- Peak flow:	75 m^3/h ca. (37.5 x 2)
- Processed material:	14,000 kg/day
- Sludge production:	0,05 kg D.M. per kg of processed material D.M. = dry matter sludge

Note 3: *considering the hair saving system, a factor of 0.05 (50% ca. lower than the usual 0.1) has been adopted.*

- Daily sludge production:	700 kg ca. D.M. (0,05 x 14,000)

Screening:

- Peak flow:	75 m^3/h
- Min. screen capacity:	80 m^3/h (adopted)

Pre-treatment of the Chrome liquors:

- Volume of the spent Chrome liquors:	100% on the hide/skin weight i.e. 14 m^3/day ca.
- Volume of the existing tank:	19 m^3

Equalization and sulphide oxidation:

- Volume of the tank:	300 m^3
- Average retention time:	1 day ca.
- Total installed power:	6.2 kW
- Specific installed power:	20 Watts per m^3 of tank (6200 : 300)
- Tranferred oxygen at s.c. (supplier datum):	8 kg/h
- Correction factor (adopted):	0.7
- Tranferred oxygen at o.c.:	5.6 kg/h ca. (i.e. max. 134 kg/day).

Note 4:
s.c. means standard conditions; i.e.20°C, O.D.= 0, low salinity and 1 Atm.).
o.c. means operational conditions.

Sulphide oxidation:

- Oxygen/sulphide rate:	1 kg O_2/kg of oxidised S^{2-}
- Sulphide removal rate:	15 kg ca. of S^{2-} per hour
- Quantity of S^{2-} to treat per day:	28.5 kg (see Note 5)

Note 5:
due to the hair saving system, a percentage of 1% of sodium sulphide (at 62%) on the hide weight has been hypothesised. 14,000 x 0,01 x 0,62 = 86.8 kg ca. of Na_2S, i.e 35.6 kg of S2- (86.8 : 78 x 32). A residual 80% of this sulphide will be discharged with the spent effluent, i.e. 28.5 kg per day.
The oxygen transfer capacity of the proposed Venturi ejectors is correct.

- Catalyst: $MnSO_4$ (not required)

Pumping:

- daily effluent volume: max. 300 m^3
- operation time of the lifting pump (adopted): 10 hrs per day
- min. capacity of the pump: 30 m^3/h (300 : 10)
- installed pump capacity: 48 m^3/h at 4 m head

Note 6: *the pump flow will be adjusted by means of a by-pass valve and the excess water is recycled back into the equalization tank.*

Flocculation:

Minimum retention time = 5 min. (adopted).
Volume of flocculation tank 30 : 60 x 5 = 2.5 m^3.
Number of tanks adopted: 1.
Dimensions 1 x 1 x 3 h m adopted (useful volume = 2.5 m^3).

Note 7: *no mechanical mixer has been foreseen, the same influent flow will assure the necessary mixing.*

Dosage of chemicals

Note 8: *the dosage of chemicals can be varied according to the required efficiency. Due to the peculiar disposal of the treated water, the quantities here indicated are tentative values.*

- Alum, industrial product, average dosage = 150 mg/l (*);
  150 x 300 : 1,000 = 45 kg/day or 450 litres solution at 10%.
- Polyelectrlyte, anionic powder, average dosage = 1 mg/l;
  0.3 kg/day or 300 litres of solution at 0.1%.
  Two dosing pumps, capacity 0-100 l/h, adopted.

(*) considering the disposal of the treated effluent onto soil, the Alum dosage has been reduced of 50% of that normally used in the tannery effluent treatment.

Primary sedimentation:

- Minimal retention time = 2 hrs (adopted).
- Tank volume 30 x 2 = 60 m^3.

A 85 m sedimentation tank, type Dortmund, has been adopted.

Sludge treatment:

- expected sludge production: 700 kg/day as D.M. or 17.5 m^3/day ca. as liquid sludge at 4% of solids

Sludge transport and disposal:

a. disposal onto soil as liquid product
- assuming a tank-truck of 3 m^3 capacity: 5-6 travels per day are necessary.

b. dewatering into drying beds

- number of beds: 8 (adopted)
- dimensions: 6 x 10 m (adopted)
- total surface: 480 m^2
- average sludge drying period: 14 days (adopted)

Note 9: *14 days (i.e. 12 work days) produce 210 m3 (17.5 x 12) of sludge. Adopting 0.5 m as max. sludge level, we need of 420 m2 (210 : 0,5) i.e. 7 beds.*

c. mechanical dewatering

- dry content in the dewatered cake: 35% (adopted)
- daily cake production: 2,000 kg (700 x 100 : 35) i.e. 1,700 litres ca. (sp. weight 1.2).
- number of filtration: 2 per day (adopted).
- volume of the filter press: 850 litres (1,700 : 2).

A 800 x 800 mm filter with 60 plates of 32 mm thickness has been proposed (total cake volume 900 litres ca.)

****

INDICATIVE COSTS FOR THE PLANT'S OPERATION
(on the basis of 300 m^3 of waste waters per day)

Cost of chemicals:
(the cost of imported chemicals is FOB)

1. Lime powder	- local -	: 0.30	Birr/kg
2. Alum (industrial product)	- imported -	: 0.95	Birr/kg
3. Anionic polyelectrolyte (powder)		: 20	Birr/kg
4. Manganese sulphate (cristals 98% grade)		: 5	Birr/kg

Electricity cost: 0.25 Birr (0.05 U.S.$ ca.) per kWh

Labour: 1.0 Birr (0.2 U.S.$ ca.) per hour

U.S.$ = U.S.A. Dollars

Note 10: *due to the change fluctuations, the prices must be considered indicative. The excange rate here considered is 5 Birr per U.S.$ (July 1993).*

Consumptions:

Note 11: *the consumptions (both of chemicals and energy) here indicated represent the average quantities.*

Chemicals:
- Alum : 90 kg/day
- Polyelectrolyte : 0.3 kg/day
- Lime : 20 kg/day

Electricity: 130 kWh/day

Labour: 1 person 8 hrs per day

Year costs (300 work days):

Alum	= 27,000 kg	= 25,650 Birr	= 5,130 U.S.$
Polyelectrolyte	= 90 kg	= 5,700 "	= 1,150 "
Lime	= 6,000 kg	= 1,800 "	= 360 "
Electricity	= 39,000 kWh	= 9,750 "	= 1,950 "
Labour	= 2,400 hrs	= 2,400 "	= 480 "
Maintenance (*)			= 4,000 "

Total operation costs: 12,920, say 13,000 U.S.$ per year

(*) Maintenance 10% per year of the main equipment price.

Because of the difficulty of a proper estimation, the cost for the transport and disposal of the liquid or dewatered sludge is not included.

****

ANNEX 1

SOME NOTES ON THE DISPOSAL OF THE PRIMARY EFFLUENT ONTO SOIL

Because of his lack of any prior practical experience, the expert has tried a theoretical approach to the problem examining some possible alternatives for the conditions at Nalbandian tannery.

A primary (physico-chemical) treatment of tannery effluent enables the following percent reduction: (most relevant pollutants):

Suspended Solids:	80 - 90 %
Settleable Solids:	90 - 95 %
COD	50 - 60 %
BOD	40 - 50 %
Sulphides	90 - 100 %
Trivalent Chrome	90 - 98 %
Ammonia	5 - 10 %
Chlorides	0%

The proposed primary treatment can produce a final tannery effluent with the following mean characteristics:

- pH	:	8-10
- BOD_5	:	500-1,000 mg/l (*)
- COD	:	1,000-2,000 mg/l (*)
- Chromium III	:	1.0-4.0 mg/l
- Suspended Solids	:	100-200 mg/l
- Ammonia	:	100-150 mg/l (**)
- Sulphides	:	1-5 mg/l (**)
- Total Solids	:	6,000-10,000 mg/l (**)
- Chlorides	:	2,000-4,000 mg/l (**)
- Sulphates	:	1,000-1,500 mg/l (**)

(*) the final value depends also on the quantity of chemicals used in the flocculation and the water consumption in the process.

(**) parameters slightly or not affected by the primary treatment.

Let us see these parameters in detail.

i. BOD, COD and Suspended Solids are removed by bacterial action and by filtration as applied wastewater percolates through the soil. BOD and SS are normally reduced to concentrations of less than 2 mg/l and 1 mg/l, respectively, after 1.5 m of percolation.

ii. Ammonia removal mechanisms include crop uptake, nitrification-denitrification, ammonia volatilization and storage in the soil.

iii. Sulphide is quickly oxidized when disposed onto soil both by chemical and biochemical reactions.

iv. 96-99% of fecal coliforms are removed biologically and mechanically by percolation through the first metres of soil. Thus, in many cases, the effluent disinfection is not necessary before the irrigation in order to prevent a bacterial pollution of the underground water.

v. The trivalent Chrome content of the effluent must be reduced at the lowest values before the disposal into the enviroment. This metal, in low concentration, is useful for the crop growth.

vi. High salinity will impair the growth of a cover crop and in clay soils will cause sodium to replace calcium and magnesium by ion exchange. This will cause soil dispersion, and as a result drainage and aeration in the soil wiil be poor. A max salinity of 0.15% has been suggested to eliminate these problems ["Diagnosis and Improvement of Saline and Alkali Soils" U.S. Dept. Agr. Handbook 60, 1954].
Excessive salinity reduces a plant's osmotic activity and so prevents its absorption of both water and nutrients from the soil (salinity hazard to the crop).
Furthermore sprinkler application of salty water can cause leaf burning.

Quality of water for irrigation (R. Ayers)

1. Effects of salinity on crop:

	No problem	Increasing problems	Severe problems
Chloride, mg/l	< 142	142 - 355	> 355
TDS, mg/l	< 450	450 - 2,000	> 2,000

2. Effects of salinity on soil dispersion and drainage:

	No problem	Increasing problems	Severe problems
SAR	< 6	6 - 9	> 9

$$\text{SAR} = \text{Sodium Adsorption Ratio} = \frac{Na}{[(Ca + Mg)/2]^{\frac{1}{2}}}$$

where the ion concentrations are in milliequivalent per liter.

3. specific ion toxicity:

	No problem	Increasing problems	Severe problems
Na, mg/l (*)	< 69	> 69	---
Cl, mg/l (*)	< 142	142 - 355	> 355

(*) water absorbed only by roots, if also leaves are involved (spray irrigation) the limits must be lowered.

Ayers indicates a tolerance (no yield decrement expected) to salinity in irrigation water of 3.1 and 2.5 mmho/cm for wheat and soybean respectively. I.e. 3.1 x 640 = 1,984 and 2.5 x 640 = 1,600 mg/l of TDS.

Note: *Salinity is generally measured by the water conductivity in micromhos per cm. The electrical conductivity may be approximately conversed to mg/l of Total Dissolved Solids (TDS) by multiplying mmho by 640.*

The UNEP Technical Report n.4 "Tanning and Environment" reports the following maximum levels as a very general guide:

- Total dissolved salts	500 mg/l (*)
- Sodium Absorption Ratio	5
- pH	4.5 - 9
- Chromium	0.1 mg/l or 50 g/ha total mass
- Toxicants (e.g. fungicides)	absent.

It is important to note that COD, BOD, Ammonia are not indicated in the UNEP table.

(*) This value is very low.
Drinking water standards recommend that finished potable water contain less than 500 mg/l TDS but more saline waters have been used with no negative effects.

Salinity effects are generally a concern only in the arid regions where accumulated salts are not flushed from the soil profile by natural precipitation.
In the wet season, the salinity is not a problem: the rain will dilute and flush the salts.

<u>Some references</u>:

"Process Design Manual for Land Treatment of Municipal Wastewater", U.S. Environmental Protection Agency (EPA), 1981.

"Land treatment of Municipal Wastewaters: Supplement on Rapide Infiltration and Overland Flow", U.S. EPA, 1984.

Technical Report n.4 : "Tanning and Environment", United Nations Environment Protection Agency (UNEP), 1990.

TENTATIVE CALCULATION OF THE TOTAL DISCHARGED SALT

The chloride content of the mixed tannery waste waters is generally too high to make the undiluted effluent usable for irrigation.
In the case of Nalbandian tannery, the expert considered 2,000 mg/l of chloride (the tannery processes mostly dry (not salted) hides and skins, only sheeps are wet-salted) and assumed 1,200 mg/l of sulphate (the second figure is the normal content of the tannery effluents).

We obtain [(2,000 : 35.5 x 58.5)+(1,200 : 96 x 142)] = 5,070 mg/l of TDS (sodium chloride + sodium sulphate).

Note: *35.5 and 96 are the atomic and molecular weights of Cl and* SO_4 *respectively and 58.5 and 142 are the molecolar weights of NaCl and* Na_2SO_4.

According with the strict UNEP standards, the theoretical necessary dilution is about 1 : 10.
This brings to a daily diluted effluent of 3,000 m^3 that must be used for irrigating 11,000 m^2 ca., i.e. 0,27 m of water per m^2 of soil per day.

So in the wet season (poor evaporation) the chloride content of the pond or in the leachate water is about 1,360 mg/l very close to the common limits for discharge adopted in many Countries (1,000-1,500 mg/l).

According to the received information, the irrigation hydraulic rate is 0.9 cm/h and n.2 sprinkler distribution systems are used (irrigating 0.6 hectares each) with one week cycles. In total 40 m^3/h of water per hectare are required therefore 1200 m^3/day are needed to irrigate the 30 hectares of the farm.
When 300 kg ca. of chloride are diluted in this volume of water (300000 : 1200) 250 mg/l ca. of Cl^- are obtained.
The calculated TDS, i.e. 760 kg/day ca. (5070 mg/l x 150 m^3 : 1000) will be diluted to 633 mg/l ca. (760000 : 1200).
<u>This value results reasonably close to the tolerance data of both Ayer and EPA</u>.

The expert's opinion is that in the Nalbandian conditions the use of the tannery effluent for irrigation is possible only if the pre-treated effluent is further diluited with fresh water of the lake.

The installed submersible pump has a capacity of 300 l/min. (18 m^3/h or 432 m^3/day) insufficient for allowing a significative dilution at the max. tannery production (300 m^3/day of effluents).

Also in the wet season (from June to September), seem to be insufficient for flushing off the residual salinity from the soil.

Note: 500 mm of rain fall (average data 1990-'91-'92) in the Debre Zeit zone in this three months period.
This quantity on the 11,000 m^2 of available land surface represents (11,000x 0.500) 5,500 m^3 of water (i.e. a mean of only 61 m^3/day).

In any case the planned recycle of the spent tanning liquors in picking will further reduce the total salinity of 50% ca.
The picking bath volume must be in any case reduced to maximum.

The tannery's max. production is about 14,000 kg/day of hides and skins (green weight) that gives approx. 13,000 kg ca. of fleshed pelts. Assuming a water consumption in pickling of 50% on the pelt weight, we obtain 6,500 litres of initial bath per day.
Let, after tanning and basification, the final volume to increase to 8,000 litres.

Note: *this figure is realistic: in many tanneries shorter floats are often used (less than 60%).*

Assuming that 6,500 litres (80% ca.) of the spent tanning liquors be recycled for the picking, 1,500 litres per day are discharged.

The quantity of NaCl normally used in picking is 8% on the pelt weight (initial desity of the pickling liquor = 10 °Bé (100 g/l of NaCl).
Without recycle, the consumption of NaCl (13,000 x 8 : 100) results 1,040 kg per day, i.e. (1,040 : 58.5 x 35.5) 630 kg/day ca. of Cl^-.

If sheep skins are processed (assuming a 20% on weight of salt) other (4,000 x 0.20) 800 kg of NaCl or 485 kg of Cl^- are discharged.

These quantities (630 + 485) give (111,500 : 300) 3,700 mg/l of Cl^- in the mixed effluent. Say 3,800 for considering also the salinity of the lake water (100 mg/l ca. of Cl^-).

With the over hypothesised recycle the NaCl consumption may be so calculated.
The density of the a spent tanning liquor is about 7 °Bé, the desired density of the picking bath is 10 °Bé: the necessary amount of NaCl is about 30 g/l i.e. (6.500 x 30 : 1,000) 195 kg per day.

The excess of bath (1,500 litres/day) gives 120 kg ca. of Cl^- (400 mg/l in the mixed effluent).

The eventual sheep skins contribution remains the same: 485 kg of Cl^- (1,600 mg/l in the mixed effluent).

The total salinity results (400 + 1,600 + 100) 2,100 mg/l of Cl^-.

Note that, when no sheep skins are processed, the Cl^- content is reasonably close to the standards for irrigation.

An other possible alternative can be the evaporation of the more concentrated wastes.

Evaporation of the pickling/tanning waters and the eventual soaking waters of the sheeps skins

The mixed liquor (water and suspended solids) from the chrome precipitation tank are pumped with the submersible pump P1 to the evaporation lagoons in this case also the soaking water from sheeps must be jointed to the residual tanning liquors.
When the residue is dry (20% ca. of dry matter), the solids are taken off and transported to the final disposal area.
The bed cleaning operation is manual with shovels and/or forks.

Due to the lack of municipal landfills, the disposal area must be selected with care in order to limit the risk of a secondary pollution of the ground water.
The possible aesthetic impact must also be considered.
These aspects must be studied by the same factory.

Tentative design of the evaporating lagoons

Assuming to adopt the recycle of the spent tanning liquors, the total volume of the excess liquor has been already calculated in 1,500 litres per day.
If sheep skins are processed also their soaking waters must be evaporated, (assuming 200% of water on the wet-salted weight) (4,000 x 2) 8,000 litres are obtained.

In order to remain within realistic (and possible figures) the expert has here done the hypothesis that the skins production be sheared at 50% between goats and sheeps.

So the mean total volume of salted waters to be evaporated is (1,500 + 4,000 litres) 5,500 litres, say 6 m^3, per day.
The average loss due to the evaporation of a flat water surface is 7 mm ca. per day in the dry season. This value is reduced to 1.2 mm per day in the wet season.

Ref. "Les Eaux Usées dans les Agglomérations Urbaines ou Rurales" C.Gomella and H.Guerrée, Ed. Eyrolles, Paris 1978, pag.283.

Note that these data have been measured at the Côte Azur, France, and higher values can be expected in Ethiopia but, in the our case, the progessive increase of the salinity and the consequent decrease of the surface tension of the liquid must affect negatively the evaporation rate.

According with these data, for evaporating 6 m^3/day of water 900 or 4,800 m^2 ca. are necessary in the dry and wet seasons respectively.

Adopting a liquid height in the lagoons of 0.2 metres, the necessary time for a complete evaporation results (200 : 7) 28.6 days (i.e. 1 month ca.) in the dry season (9 months per year).
The monthly production (25 work days) is (6 x 25) = 150 m^3 so the total necessary surface is 750 m^2 (150 : 0.2).

The expert has tried an operation hypothesis.

The installation of three lagoons of dimension 50 x 20 metres each (total surface 3,000 m^2).

Note: the lagoons must have the lateral walls in compacted ground with a height of 40 cm and the bottom in natural ground, eventually sealed with compacted clay.

With an average liquid level of 0.2 m, each lagoon has a capacity of 200 m^3 (i.e. a capacity of 33 work day).

Note that the volume of two lagoons is very close to the volume of the salted water produced in the three wet months (75 work days).

In the dry season only a logoon seems be sufficient for the complete evaporation.

The big difficulty of this solution is the slope of the available soil that does not allow the realization of such lagoons.

The RI (rapid infiltration) system still remains the simplest possible alternative.

Land area requirements

The estimation of the area necessary for the RI treatment may be done with the equation:

$$(1) \quad A = \frac{(1.9) \times (Q)}{(L) \times (P)}$$

where:
A = field area for treatment, ha
Q = design daily flow, m^3/day
L = annual design percolation rate, m/yr
P = period of operation, wk/yr

Since RI systems typically operate on a year-round basis, the equation becomes:

$$(2) \quad A = \frac{(0.0365) \times (Q)}{(L)}$$

Determinating the design annual hydraulic loading rate is one of the most critical aspects of RI system design. The operational cycles (wet/dry periods) is another important factor.
Normally 1-4 days of irrigation are followed by 7-14 days of rest (drying).
The hydraulic loading rate is based directly upon the field and laboratory test results for infiltration, permeability and hydraulic conductivity.

The expert has tried the some calculations.

The equation (2) considering 300 m^3/day of tannery effluent + 21 m^3/day of rain (0.7 x 11,000 m^2 : 365) and the area available 1.1 ha (11,000 m^2) gives:

$$L = \frac{(0.0365) \times (321)}{1.1} = 10 \text{ m/yr ca.}$$

The hydraulic laoding rate used in some RI systems installed in the USA for primary treated municipal effluent is between 15-20 m per year: so the system seems realisable.

Because of the site slope, the water distribution system must be properly selected for avoiding erosion problems before an adequate vegatative cover is established.
The most suitable system seems to be a upper distribution channel with different out-let alternatives (for allowing the cyclical dry periods) followed by series of terraces or channels fed by gravity.

****

Proposed E.T.P. at Nalbadian tannery - Ethiopia

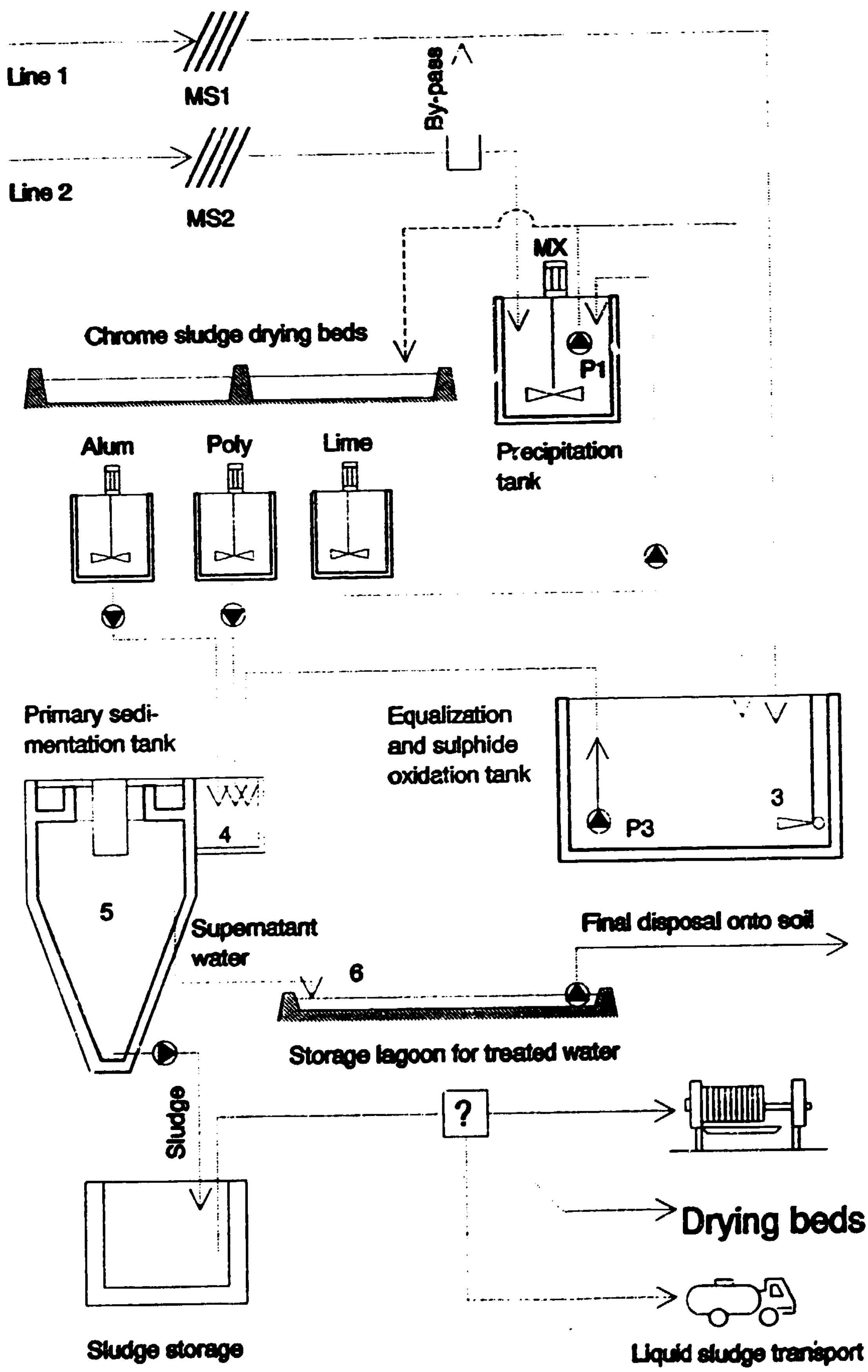

ANNEX 3

INDICATIVE PAMPHLET OF THE NECESSARY EQUIPMENTS

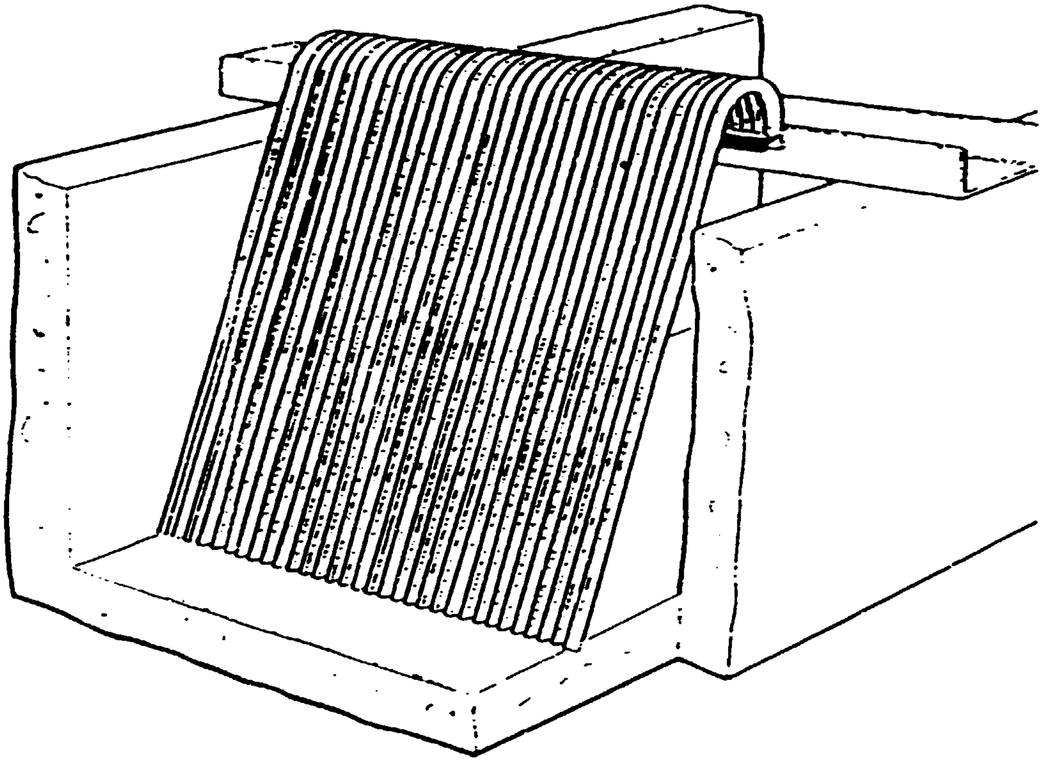

Simple manually raked screen. Flow is from left to right

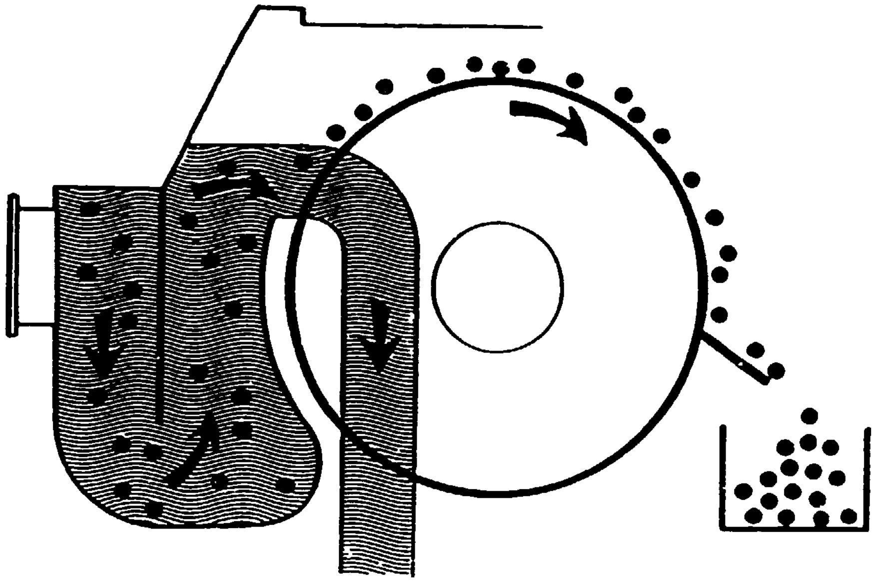

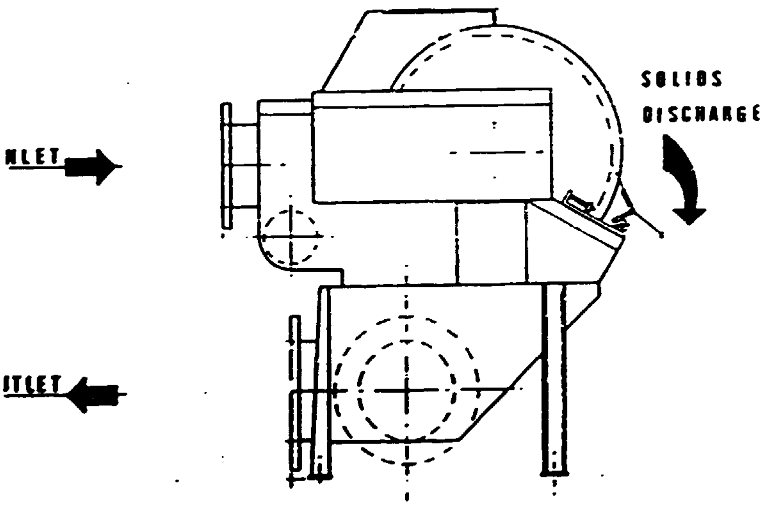

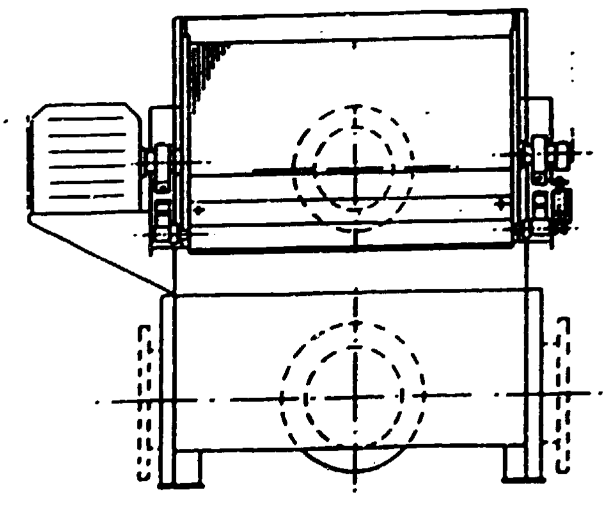

Rotating drum screen

Fine bubble membrane diffusers

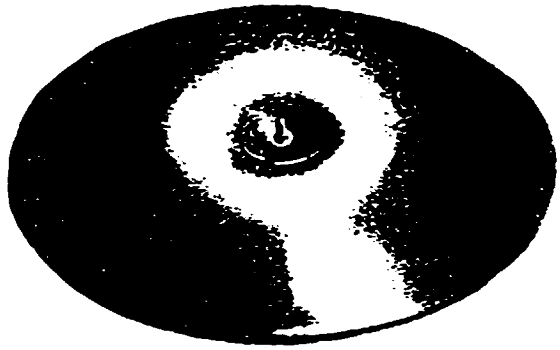

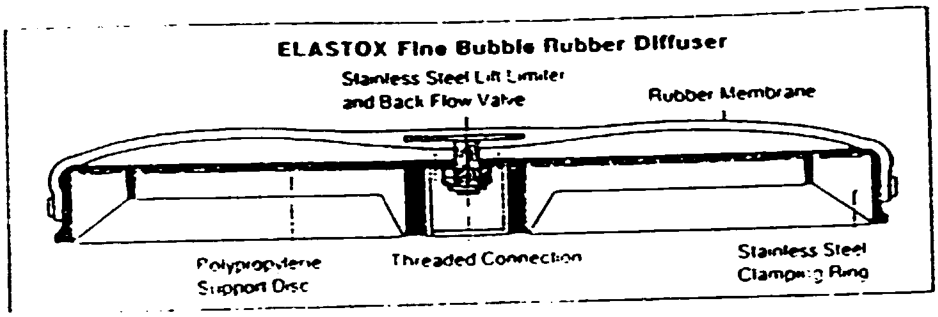

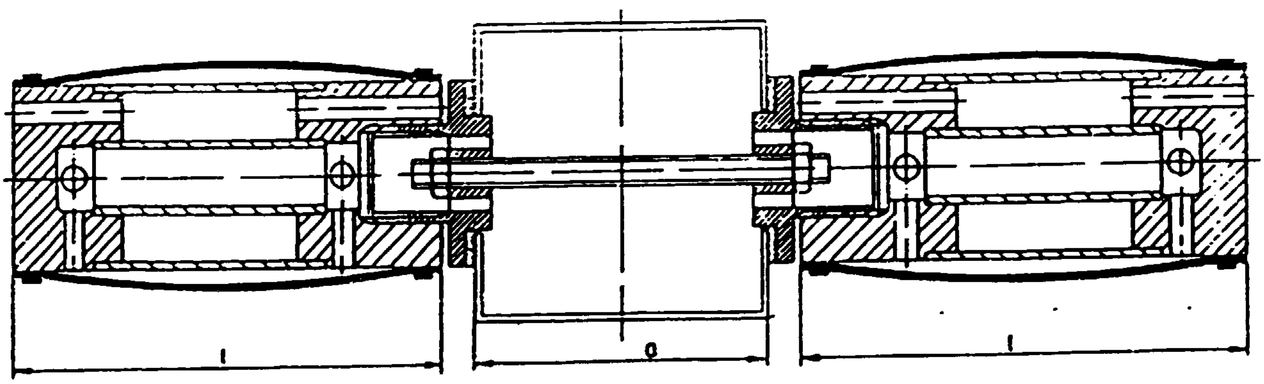

Membrane diaphragm diffuser

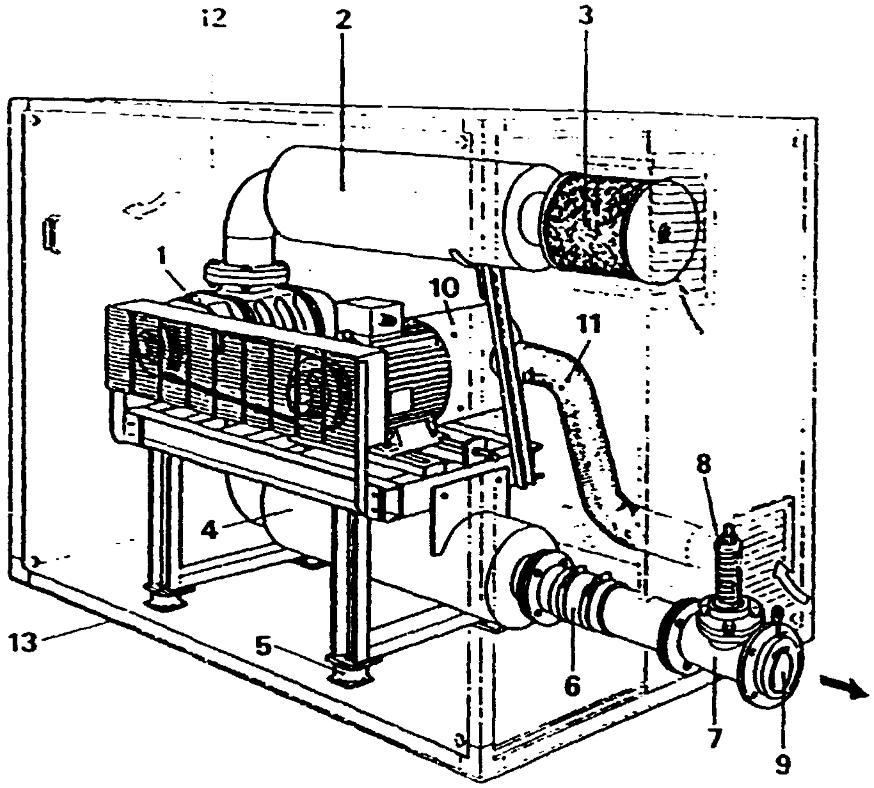

Pos.	DENOMINAZIONE
1	SOFFIATORE
2	SILENZIATORE ASPIRANTE
3	FILTRO
4	SILENZIATORE PREMENTE
5	SUPPORTI ANTIVIBRANTI
6	RACCORDO ELASTICO
7	RACCORDO A TRE VIE
8	VALVOLA DI SICUREZZA
9	VALVOLA DI RITEGNO A CLAPET
10	CALOTTA SPECIALE MOTORE
11	TUBO FLESSIBILE
12	USCITA ARIA VENTILAZIONE
13	TAMPONAMENTO CON MATERIALE ISOLANTE

Part. No	PART DESCRIPTION
1	Blower
2	Suction silencer
3	Filter
4	Discharge silencer
5	Shock insulating feet
6	Rubber expansion joint
7	Three way connection
8	Safety valve
9	Non return valve
10	Outer motor cap
11	Flexible air pipe
12	Air outlet
13	Plugging by insulating material

Blower

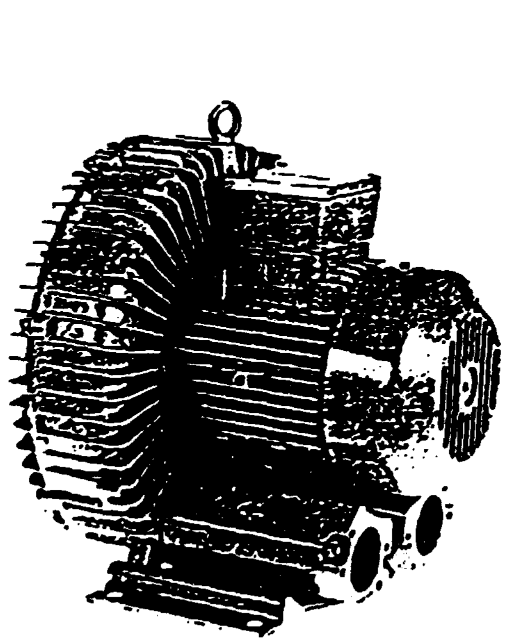

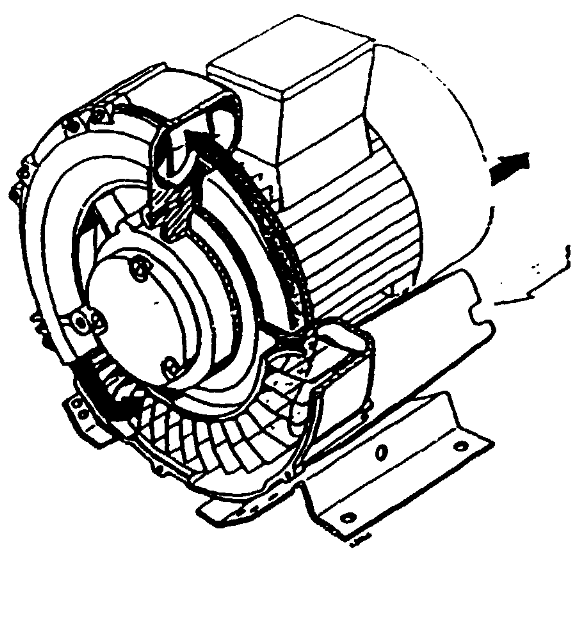

series

"BIOXY-VF"

FLOATING HIGH SPEED AERATORS

These machines have a " pancake " type of float that support it and the axial thrust generated by a marine shaped propeller running at high speed.

The floating high speed aerators can be manufactured in anticorrosive materials and stainless steels.

The construction of the aerators is such that it can follow the level of the liquid thereby maintaining a high oxygen transfer irrespective of the depth of the liquid.

Aerators developed from the " BIOXY-GA " low speed type.

The installation is extremely simple and does not require civil works or support bridge.

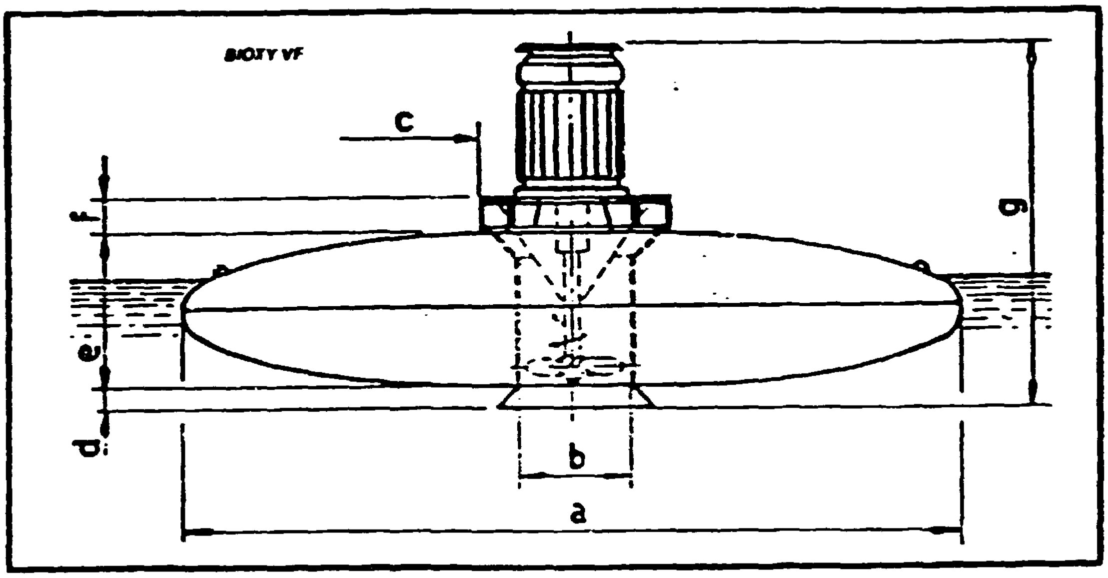

BIOXY TYPE	4-POLE MOTOR HP	PUMPING RATE m³/h	O_2 ABS. Kg·hO_2	SHAFT e	"PANCAKE" FLOAT a	b	c	d	BAFFLE PLATE Øc	f	DIMENSIONS g	BIOXY TYPE
VF-1	3	620	5.2	40	1600	[illegible]	75	310	500	275	964	VF-1
VF-2	4	750	6.5	40	1600	[illegible]	75	310	500	275	964	VF-2
VF-3	5.5	850	8.4	40	1600	[illegible]	75	310	500	275	1003	VF-3
VF-4	7.5	980	11.8	50	1900	[illegible]	110	400	580	335	1204	VF-4
VF-5	10	1250	15.2	50	1900	[illegible]	110	400	580	335	1242	VF-5
VF-6	15	1450	22.8	50	1900	[illegible]	110	400	580	375	1372	VF-6
VF-7	20	1870	27.3	50	1900	300	110	400	580	375	1372	VF-7
VF-8	25	2200	36.5	60	2100	340	110	460	650	429	1529	VF-8
VF-9	30	2570	42.5	60	2100	340	110	460	650	429	1589	VF-9
VF-10	40	3520	57.6	70	2500	350	110	700	700	469	1935	VF-10
VF-11	● 50	4250	73.6	70	2500	500	110	700	770	504	2056	VF-11
VF-12	● 60	4850	87.7	70	2500	500	110	700	770	514	2186	VF-12
VF-13	● 75	5620	112	70	2500	500	110	700	770	514	2204	VF-13
VF-14	● 100	8560	149.7	80	3000	580	110	910	880	611	2483	VF-14
VF-15	● 125	10570	[illegible]	80	3000	580	110	[illegible]	[illegible]	771	2500	VF-15
VF-16	● 150	11300	[illegible]	80	3000	580	110	890	[illegible]	771	2511	VF-16

● 6-pole motor

Surface aerator

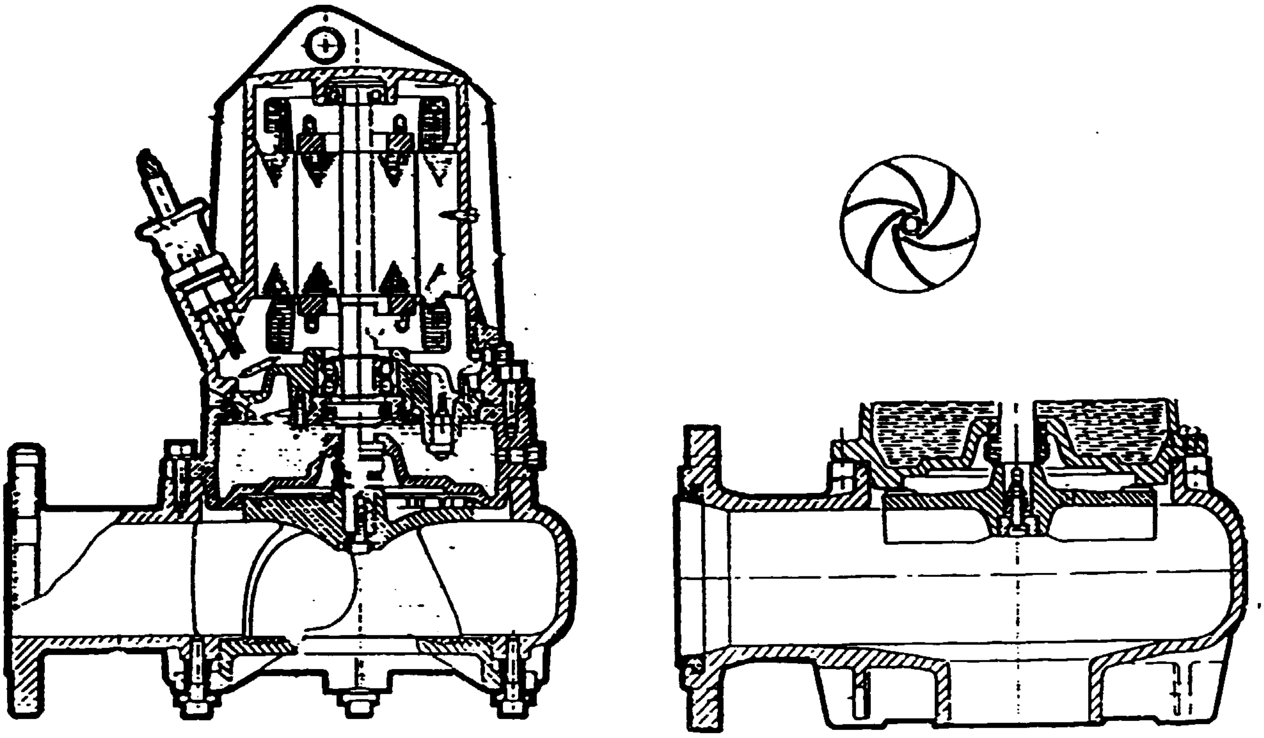

Submersible pumps

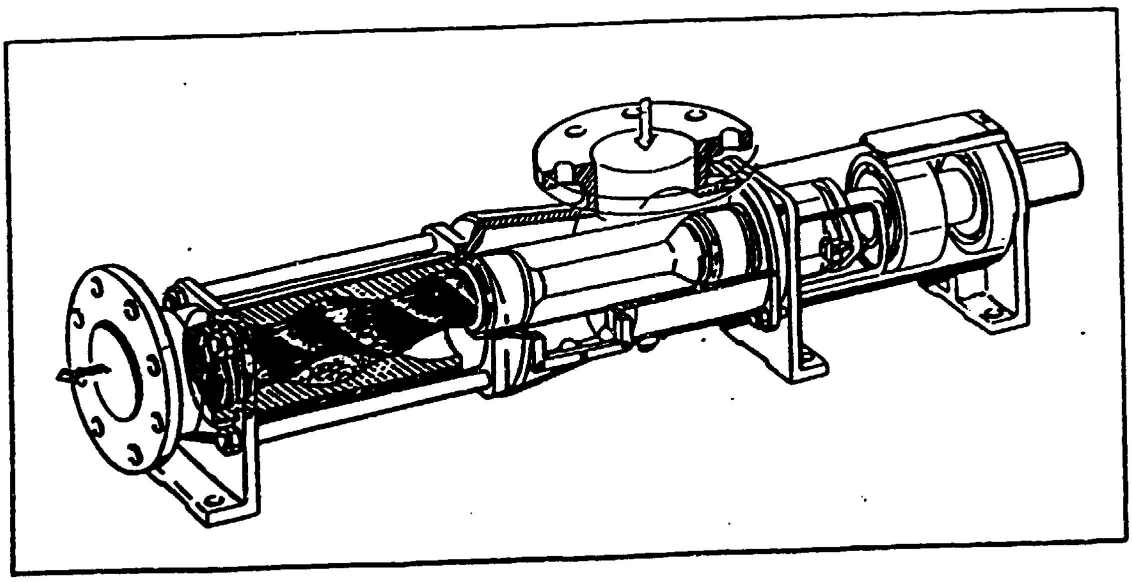

Screw pump

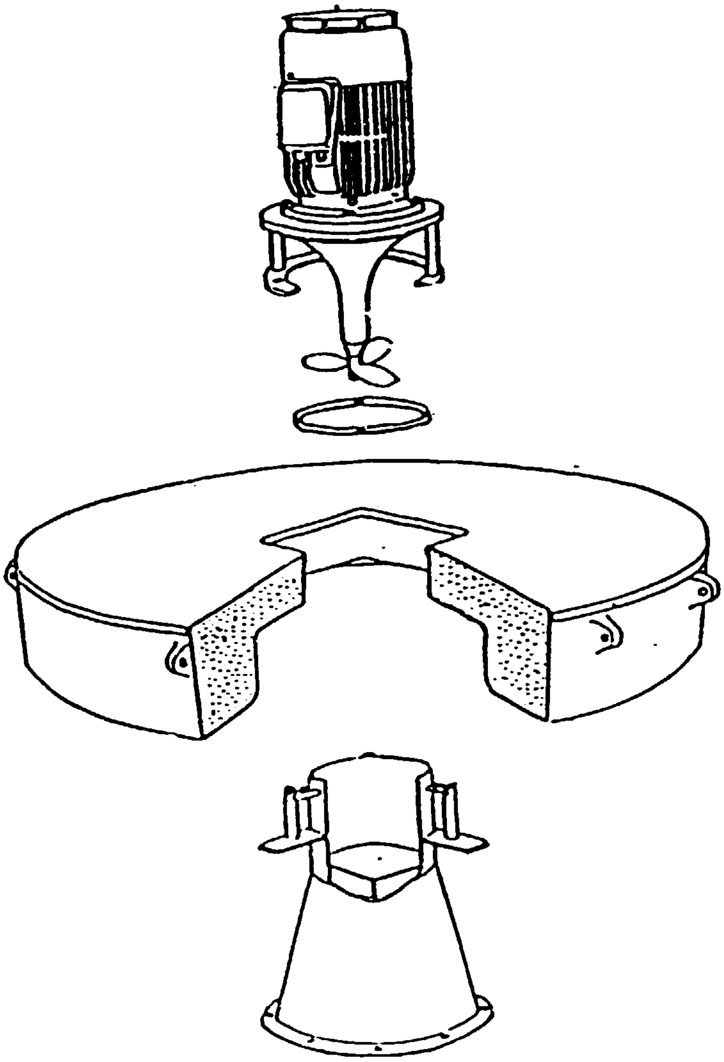

VENTURI EJECTOR (Assembly)

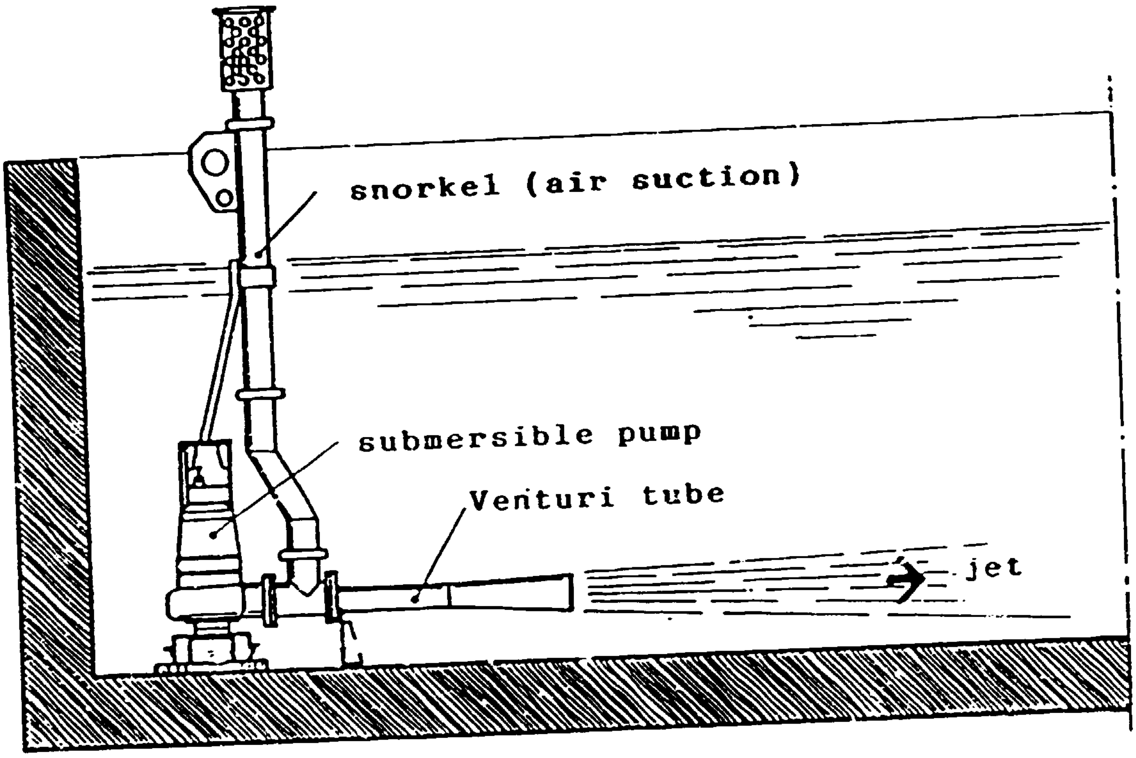

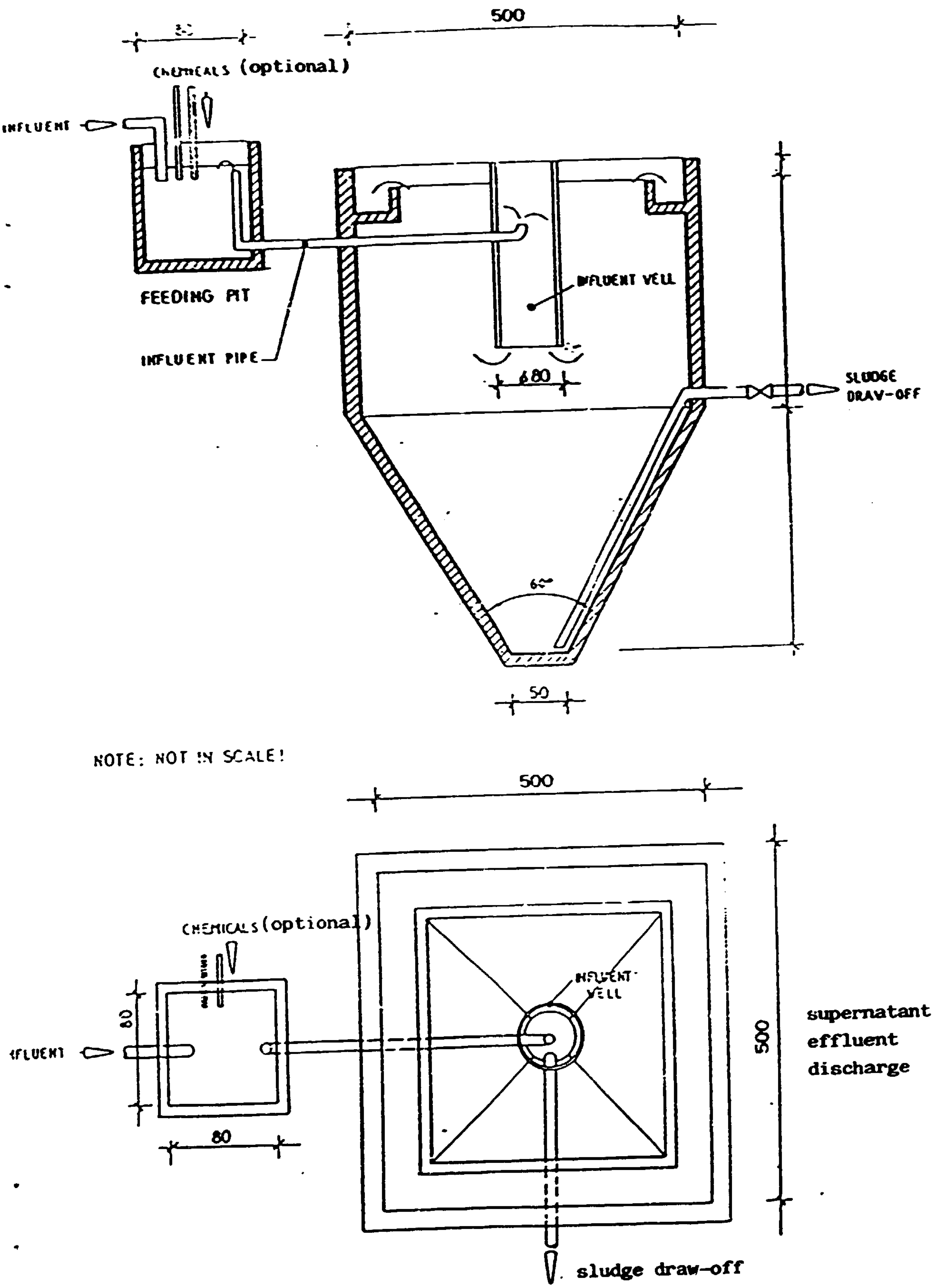

PRIMARY STATIC CLARIFIER
Pyramidal

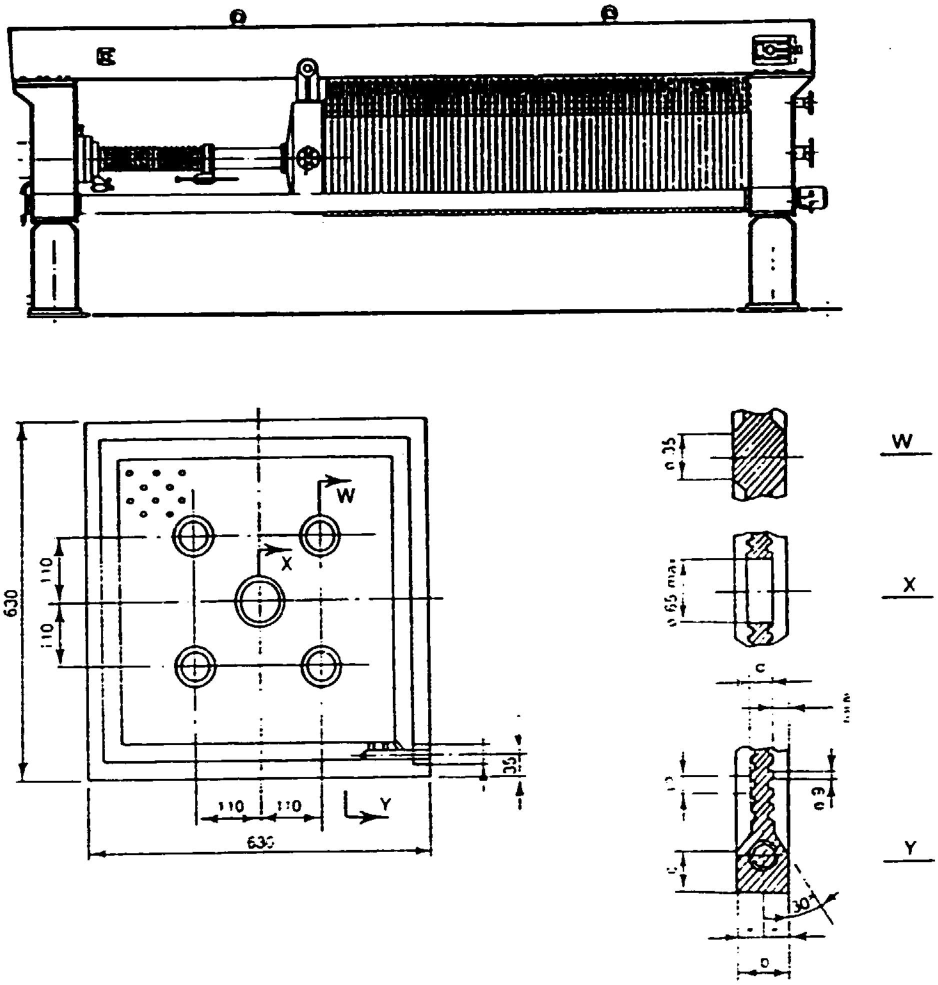

Filt·r press with plate 630 x 630 mm

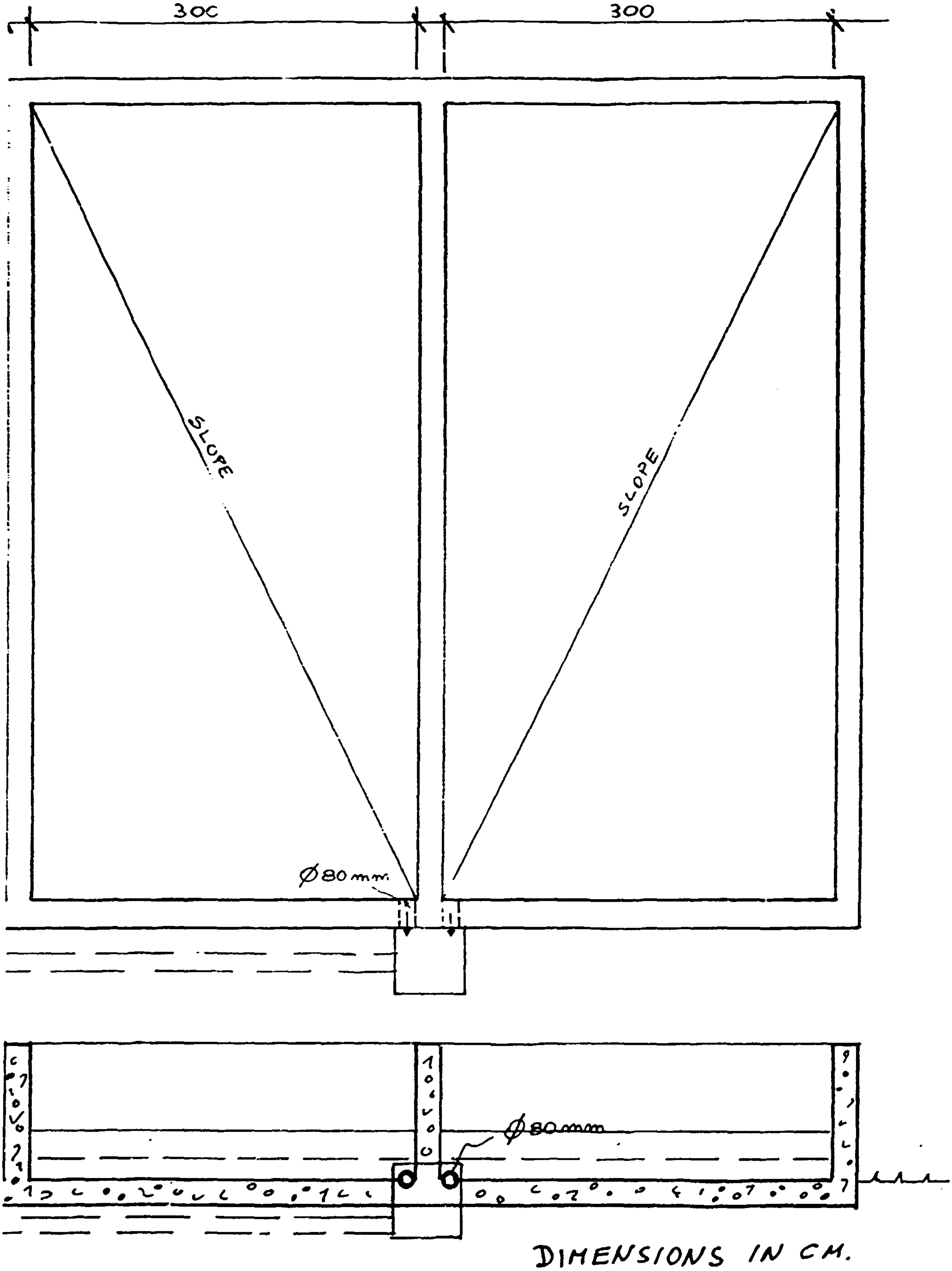

Sludge drying beds