OCCASION

This publication has been made available to the public on the occasion of the 50th anniversary of the United Nations Industrial Development Organisation.

DISCLAIMER

FAIR USE POLICY

CONTACT

Please contact publications@unido.org for further information concerning UNIDO publications.

For more information about UNIDO, please visit us at www.unido.org

UNITED NATIONS INDUSTRIAL DEVELOPMENT ORGANIZATION
Vienna International Centre, P.O. Box 300, 1400 Vienna, Austria
Tel: (+43-1) 26026-0 · www.unido.org · unido@unido.org

1 OF 2

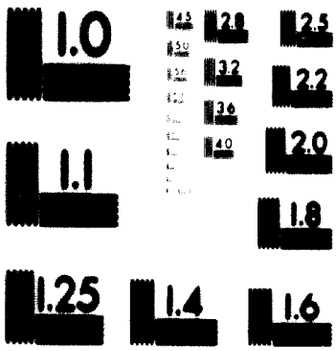

MICROCOPY RESOLUTION TEST CHART
NATIONAL BUREAU OF STANDARDS
STANDARD REFERENCE MATERIAL 1010a
(ANSI and ISO TEST CHART No. 2)

24 x
F

Restricted distribution
September 1967
Ref. No. ID/OA 200 ICE
ENGLISH ONLY

United Nations Industrial Development Organization

03540

Iceland.

FINAL REPORT OF THE UNIDO/UNDP MISSION TO ICELAND TO INVESTIGATE THE MANUFACTURE OF CHEMICALS FROM SEAWATER IN ICELAND

FROM 13 - 26 JULY 1967

1967

3739

id.68-3317

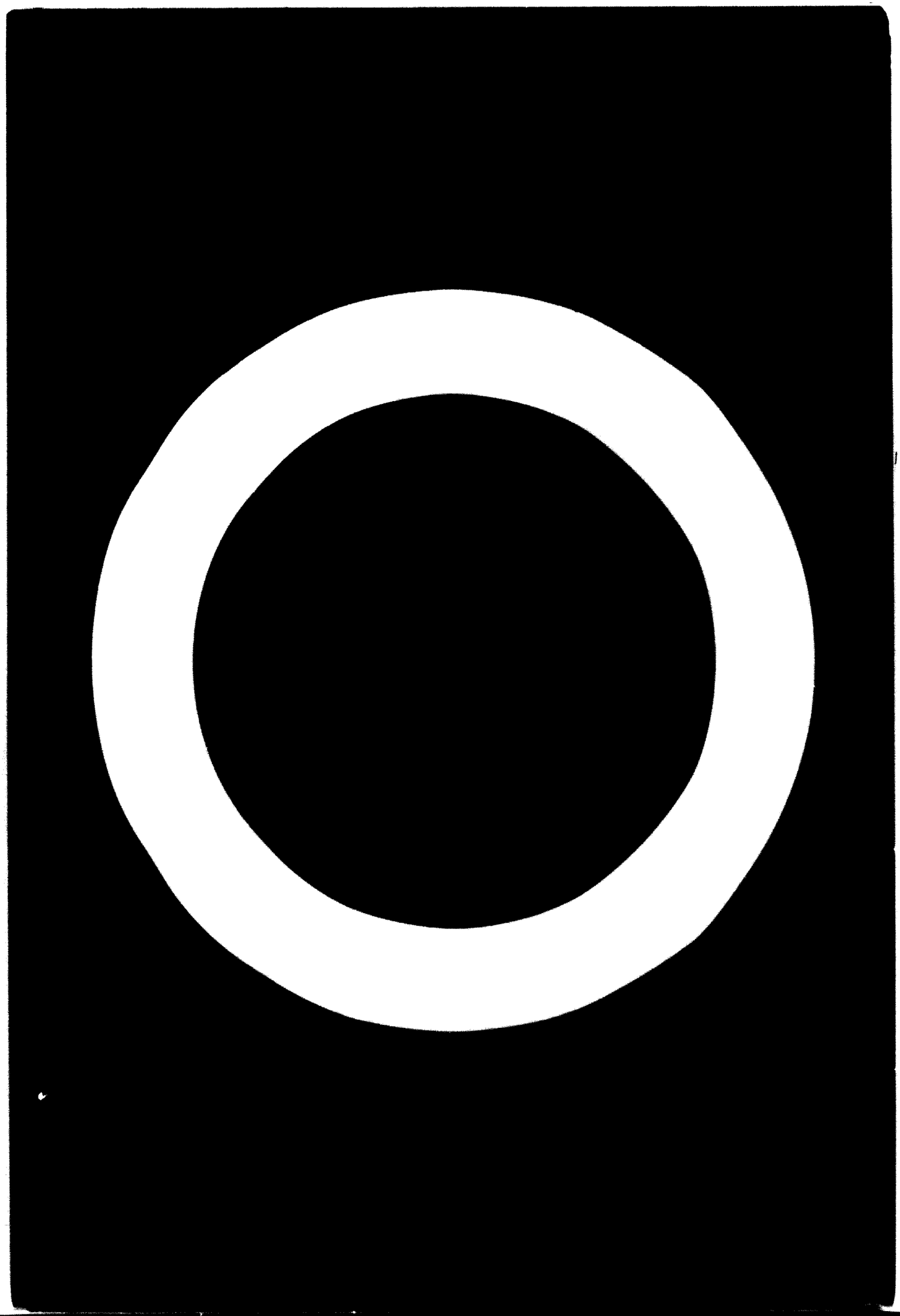

PREFACE

This Report was written in two stages. At the urgent request of the Icelandic authorities, a first draft was completed in August 1967, within one month of completing the Mission. The purpose of the draft was to elicit comments and queries, and use them in finalising the recommendations within a few weeks. The comments were received in early December 1967, but the author received the opportunity to finalise the Report only in September 1968: hence the delay in presenting this Report, which is deeply regretted.

The first draft Report was written in haste, as it was expected to rearrange the material in a more logical and coherent form in the final version. However, several persons have already done extensive work on the draft, and have given copious references to paragraph numbers. If the paragraphs were renumbered it could cause serious misunderstandings. Therefore it was decided to leave the numbering of the paragraphs almost exactly as it was in the draft. It is hoped that the slight incoherence and few repetitions which are noticable in the Report will be excused, in view of this explanation.

The draft report indicated one possible design, and provided all the essential parameters, with some cost data. There was no attempt at working out even a preliminary engineering estimate. In response to a request from the Icelandic authorities, as well as UNIDO itself, we are making an attempt to make an engineering estimate. Because of the lapse of time and inadequacy of data this estimate is to be regarded only as a first approximation. To avoid disrupting the paragraphing of the draft, and also because it is repetitious of some of the data of the main Report, it will be made into a separate draft, which can be considered entirely in its own.

In June 1968 we consulted Dipl.Ing. Dr.techn. Adalbert Orlicek, Professor of Chemical Engineering at the Technische Hochschule, Vienna, Austria, on the (unrevised) draft Report. His opinion is reproduced as Annex I.

(B. Thiagarajan)
UNIDO Mission to Iceland on Manufacture of Chemicals from seawater

Vienna, Austria
20 September 1968

Table of Contents

		Page
Preface		3
Table of contents		4
Letter of transmittal		5
Summary and conclusions		16
Terms of reference		20
Technical Report		
I.	Introduction	21
II.	Seawater as a source of chemicals	23
III.	Process design considerations	28
IV.	Iceland and its conditions	46
V.	The geothermal resources of Iceland	51
VI.	The glaciers of Iceland	55
VII.	Electrical resources of Iceland	58
VIII.	Miscellaneous factors	60
IX.	The marketing of the chemical products	62
X.	Process technology	68
XI.	Costs and economics	80
XII.	Potential locations	87
XIII.	Conclusions and recommendations	94
Annexes		
I.	List of useful publications	95
II.	Seawater composition, properties, behaviour	103
III.	Main products from seawater and their uses	108
IV.	(Consolidated and omitted)	-
V.	Properties of refrigerants	110
VI.	Particulars of Icelandic glaciers	111
VII.A-E	Processing of seawater, etc.	112
VIII.	Costs	118
IX.	Costs of further investigations	120
X.	Opinion of Professor A. Orlicek	122
XI.	Partial list of persons interviewed	124
XII.	Units and conversion rates	125

LETTER OF TRANSMITTAL

To: Mr. I. H. Abdel-Rahman
Executive Director
UNIDO

Sir,

Seawater Chemicals - Mission to Iceland

101. According to the scientific literature, it is known that when seawater is continuously frozen, the first salt to separate is sodium sulphate. Since sodium sulphate is more valuable than common salt (sodium chloride), it appeared to the undersigned that this phenomenon could possibly be made the basis of a commercial process, and some informal discussions took place. Therefore, at the request of the Government of Iceland, communicated through the Ambassador for Iceland to the United Nations, Mr. Hansson Kjartansson, a UNIDO Mission was sent to Iceland to explore the possibilities of manufacturing sodium sulphate and related chemicals from seawater in Iceland, primarily by the use of glacial cold and geothermal heat in a refrigeration cycle. The Mission consisted of the undersigned sole. The Mission was in Iceland from 13th to 26th of July, 1967. The Mission was directed and guided by the Icelandic National Research Council (Director Mr. Steingrimur Hermannsson).

102. Prior to the Mission's departure for Iceland, a certain amount of literature research and preliminary calculations had been carried out in New York and some results were sent to the Government of Iceland. A copy of a technical report relating to approximately the same subject matter, written for the Icelandic Research Council by Messrs Vilhjalmur Ludviksson and Baldur Lindal, formerly of the State Electricity Authority of Iceland, was received from the Icelandic authorities a few days prior to the Mission's departure. It covered the manufacture of salt, potash and various other salts from geothermal brine by a boiling process. Unfortunately, it was written in Icelandic, and interpretation services in New York were few, so that not much could be made of it.

103. On the basis of technical data published by the various Agencies of the U.S.A. Government (in particular, the Office of Saline Water, the Geological Survey, the Bureau of Mines, the National Bureau of Standards), the United Nations publications on desalination, and several other documents,*/ it appeared that two factors were crucial to the process of freezing sodium sulphate out of seawater in Iceland, namely:

(1) the production and transport of a secondary refrigerant from glacial ice (the ultimate refrigerant); and

(2) the recovery of the secondary refrigerant (for recycle) by the use of geothermal heat.

The many other factors which entered into the manufacture, disposal and movements of the products were conventional, and could be calculated in the normal way.

104. The Mission had many discussions on these problems with Icelandic officials and professional consultants, in particular Mr. Baldur Lindal himself, now a private consultant in Reykjavik. Field visits were made to all the important sites, including a glacier, seacoastal pumping sites, geothermal energy recovery plants, and existing factories where skilled and unskilled labour was employed in fair numbers. Meetings were held with officials of the Ministry of Foreign Affairs and Ministry of Industries. In Iceland it seems to be fairly common for professionals to remain in public service for some time and then quit in order to set up in private consultancy practice. Several leading experts with international reputations belonged in this category. The Mission paid calls on several of them, and was thereby able to gather valuable information and some suggestions.

105. At a very early stage of the Mission's discussions, Mr. Steingrimur Hermannsson, Director of the Icelandic Research Council, mentioned that there was an alternative to this particular project, and that was the Baldur Lindal proposal for manufacture of salt from hot underground brines, especially those in Reykjanes. Considerable work had been done in Iceland on this latter project, and two reports had been prepared by

---

*/ A full bibliography will be found appended to the Technical Report - see page 95.

Mr. Viljhalmur Ludviksson and Mr. Baldur Lindal, in 1965, and by Mr. Baldur Lindal in 1967 respectively.*/ The Government of Iceland desired that these Reports be taken into consideration by the Marine Salts Mission. This request was accepted by the Mission, since the subject was so closely related. Unfortunately the translations of the Lindal papers were not all available until very late.

106. After a few preliminary discussions to clarify the scope of the Mission and define the boundaries of its responsibilities, terms of reference were issued by the Director of the Icelandic Research Council, in consultation with the Mission, on 20th July, 1967, and are reproduced in Annex B.

107. On the basis of all these discussions, consultations and visits, the Mission prepared the draft of a Technical Report, which was given to the Government of Iceland to evoke comments and suggestions. It was intended to use these reactions to finalize the Report. On 4th December, 1967, Mr. Steingrimur Hermannsson met the Mission in New York and presented a series of comments and queries by Icelandic engineers. Oral replies were given across the board, and this was followed by detailed written replies dated 5th December, 1967 and 26th April 1968. After some further collection of data, consultations and refinement of calculations the Report was finalised in September 1968. A summary of the Report and its conclusion, and the recommendations in brief are subjoined to this letter (Annex A).

108. The main conclusion is that there seems to be a <u>prima facie</u> case for the establishment in Iceland of a commercially viable chemicals complex, based upon freezing of seawater, to manufacture in the first instance -

Sodium sulphate
Sodium chloride
Magnesium chloride, sulphate, oxide
Calcium chloride
Potassium chloride, sulphate, bromide
Bromine
Borax, boric acid
Trace element residues.

---

*/ See bibliography references, Nos. 113 and 111 for titles

The data collected by the Mission in Iceland and elsewhere substantially confirm the original premises based on theoretical grounds. In brief, the following commercially practicable process appears to indicate definite promise:

(1) manufacture of a cold secondary refrigerant liquid from the ice produced within the plant from the freezing of seawater, supplemented by ice from a glacier;

(2) pumping of seawater into treatment tanks through a glacial river substantially at 0°C;

(3) multi-stage heat interchange between (1) and (2) to produce, respectively, ice, sodium sulphate, and residual brine;

(4) use of geothermal heat to restore the thermodynamic potential of the refrigerating medium, and also (separately) to manufacture salts from the residual brine of the seawater.

The flow sheets in the Technical Report present a diagrammatic view of the foregoing.

109. It is, of course, impossible to made any kind of detailed project study from the very scanty data collected in the brief period of the Mission's stay in Iceland. That job is for a later stage, if it is decided to proceed further with this project. Nevertheless, it is necessary to provide some data to indicate on what the Mission's conclusions were based. Accordingly, the Mission presents in Annex VIII of the Technical Report a rough idea of the possible economics of a suitable project. The estimate covers only the manufacture of sodium sulphate, in order to simplify matters. The remaining parts of the complex, depicted in the flow sheet diagrams, could be treated on the same lines. It is to be understood that the estimates are not to be taken as accurate, and cannot be used for working purposes. However, it is believed that they are sufficiently reliable on an order-of-magnitude basis to enable management decisions to be made whether or not to follow up the matter any further. In order to determine the input parameters and optimise the process conditions, more work is needed, both in the field as well as on the design table.

110. The Lindal Project was examined by the Mission, and discussed in close detail with its architect, Mr. Baldur Lindal, and his associate, Mr. Sigurdur Halleson. The Mission agrees that the Lindal project appears to be both technically sound as well as economically feasible.

Mr. Lindal's main recommendation is that further studies on his proposal should be made, and that exploratory dr lling be done. The Mission endorses this recommendation. It should be mentioned, however, that the composition of the brine on which the Lindal plant would work is substantially different from seawater. The brine is believed to be coming from the sea, but somehow changing in the course of subterranean movement, losing its magnesium and sulphate contents, and gaining in calcium and potassium. Whether this is a permanent or temporary phenomenon cannot be discovered without prolonged testing, but, of course, there can be no such thing as a permanent alteration of seawater in this manner. The most that can be hoped for in large-scale commercial exploitation is that the mutations will last for longer than the economic life of the plant itself. Whether the changes, if real and "permanent", would enhance or detract from the minerals value of seawater also cannot be stated without some further calculations of yield and assessment of market potential, but certainly with few exceptions sulphates are commercially more valuable than chlorides. Prima facie, therefore, freezing should yield more valuable products than boiling. Net advantages cannot be determined so easily.

111. The terms of reference called for evaluation of the possibility of a third alternative, namely, applying geothermal heat directly on seawater to produce several salts. This third proposition has been investigated in some detail at least three times in the recent past, once by Dr. M. S. Patel (1959) under an USAID grant, next by Manistee Engineering Associates (1960) for the UN Technical Assistance, and finally by Messrs Viljhalmur Lúdvíksson and Baldur Lindal (1965) for the Icelandic National Research Council.[1/] All three reports indicated that the proposition might be attractive under certain conditions. The present Mission, however, feels that there is more promise in the other two possibilities mentioned in the Terms of Reference. In the first scheme (the project to manufacture sodium sulphate etc.), there is the advantage of obtaining a product (sodium sulphate) which is five to twenty times as valuable as common salt. In the Lindal project (the second

1/ Bibliography references, Nos. 120, 114 and 113

scheme in the terms of reference), there are the advantages of starting with a brine 50 per cent stronger than seawater, and also free of magnesium and scale-forming sulphate. None of these advantages are to be found in the third alternative, which is to boil down ordinary seawater with geothermal steam. But it does possess the advantage that a large amount of work has been done and is being done around the world on the simple evaporation of plain seawater*/: hence, the process lends itself to more accurate cost estimation and plant design. It makes also for economical quotations. Furthermore, there may be possibilities of setting up an experimental plant in water desalination. Thus, the Mission is reluctant to discard the possibility altogether. Although it should not command the priority of attention which the other two possibilities do, the cost of further action thereon is relatively so small that the idea could certainly be pursued further.

112. In view of the favourable prognosis that has been reached, the Mission recommends that the Government of Iceland take all necessary steps, in co-operation with the United Nations, to effectively evaluate the technical cost and economic data on the two main projects under consideration, which are:

(1) the proposal to utilise seawater (10,000 to 15,000 tons per day) to manufacture several chemicals (equivalent to 100,000 tons common salt per year) by the use mainly of glacial cold, geothermal heat, and hydro-electric power, and

(2) the proposal to utilise subterranean brine (such as the occurrence at Reykjanes) to manufacture the same quantities of chemicals (of somewhat different composition) by the use mainly of geothermal steam and electricity.

It is also recommended that a specific preliminary design and cost estimate be made of the process to extract salts from straight seawater (10,000 to 15,000 tons per day) by use of geothermal steam and electricity, on the basis that past investigations have already indicated the general feasibility of this proposition.

---

*/ Almost invariably with the object of manufacturing water for irrigation or domestic use.

113. The investigation of the first proposition, namely, the sodium sulphate project, is likely to prove the most rewarding; however, it is also likely to make the greatest demands on time, resources, manpower, and funds. The following preliminary steps would be required:

(1) thorough investigations of availability of quality and quantity of geothermal energy*/ under or near or from the three main coastal glaciers**/ on the sea side;

(2) suitability of the available site or sites for establishing an industrial chemicals complex and for transport of the products;

(3) contract with some consulting engineering firm to make the detailed studies and estimates.

114. Iceland is truly fortunate in possessing a very active, energetic, experienced and knowledgeable Glaciological Society, which has already collected a massive amount of data and observations on the glaciers of Iceland and on many related matters, including volcanic activity, geothermal energy, hydro-electric potential, oceanography and the like. Some of the material already published is of high standard. The State Electricity Authority (now the National Energy Authority) had also sponsored a large volume of investigations in the past. It is, therefore, likely that much of the technical expertise needed for the preliminary reconnaissance survey could be organised endogenously. The main requirements would be funds for purchase of some equipment, and for the time of those engaged in the work, and for reimbursement of costs of drilling to the National Energy Authority. One experienced glaciologist from outside for a period of about six months would probably be quite sufficient. The cost of the entire job, including transport equipment, drilling staff and all other incidental expenses, may be put at a tentative figure of $400,000. A make-up of this cost is given in Annex IX to the Technical Report.

115. The Lindal Project has already been investigated fairly extensively and much data has already been accumulated. The most important follow-up action needed at present would seem to be to put down two test borings,

---

*/ "Energy" in this context includes both heat and cold.

**/ See paragraph 387 post

one about 1400 metres deep, and the other about 800 metres deep, to test whether brine of the assumed quality would be available on a sustained yield basis. For this purpose, trials must continue for a few months at the full delivery capacity of the bore-holes. Parallel geophysical and geochemical studies are also needed. The over-all cost of this investigation may possibly reach $300,000. If, however, this work is done in conjunction with the previously - recommended (sodium sulphate) investigations, it is possible that the cost could be reduced to $200,000, or less. The breakdown of this cost is given in Annex IX to the Technical Report.

116. As for the Lindal proposal to obtain a design and cost estimate of manufacturing salts direct from seawater by use of geothermal heat and electricity, it is a simple question of engaging the services of an engineering consultant with past experience in this field. There are many of them in several different countries. It is believed that any of them would be glad to undertake this work for a fee in the neighbourhood of $10,000 to $20,000, if they are given the material already collected and the services of professionals already available in Iceland. The project report should be sufficient in all respects to invite bids for the plant which it recommends, and should therefore be complete with flowsheets, materials balancing, energy balancing, specifications, standards, tolerances, designs, plans, drawings, quantities, etc. Constructional drawings would not be needed, as the successful contractor would provide his own in due course. Several such costing studies have already been published in the world, and many more have been investigated. It is not necessary that this be made into a separate project, and it had best be combined with the other two.

117. Hitherto all matters relating to the Marine Chemicals industry have been handled by the Icelandic Research Council. The management has been competent, thorough, energetic and businesslike. It would seem that the time has now come for the Icelandic Research Council (or some other suitable body) to set up a specific organisation to attend to the day-to-day executive decisions relating to the Seawater Chemicals Scheme, maybe retaining to itself over-all control, guidance, policy, finance and external relations.

118. The Mission's recommendation, in brief, is that all three technological possibilities be examined further. The total cost would be around $500,000 to $600,000. This is a large sum for a small country; on the other hand, the possible benefits could run into millions of dollars every year, mainly in foreign exchange earnings or savings. It would diversify an economy hitherto precariously dependent upon a single product - fish. It could be the nucleus of a large industrial and commercial complex, creating sub-regional two-way trade ties with neighbouring countries and the European Economic Community. Most of all, it will convert into beneficial and valuable use several natural resources which are going to waste at present. This last consideration alone would justify much effort.

119. Indeed, after this Report was drafted in September 1967, further investigations and consultations have indicated even more promise for the freezing process than originally considered likely. If, therefore, the Icelandic authorities are able to reach a conclusion, on the data already available, to opt for the freezing process in principle, it would be possible to recommend a Special Fund project straightaway, to include all preliminaries (such as survey and field exploration) as well as a pilot plant in which the fullscale parameters will be optimised. The cost of all this would be of the same order as the cost of the investigations recommended above, namely, $500,000 to $600,000, excluding transport facilities, housing and suchlike offsite infra-structure. The resultant plant, buildings and scientific data could be fully embodied in the commercial-scale plant to follow.

120. The Mission therefore recommends that the United Nations keep the project under review and help the Government of Iceland in one of two ways. The first may consist of the assistance Iceland may need in establishing the technical and economic data, making all such field, shop and office investigations as may be needed for the purpose, the cost of which, as stated above, may run into $600,000. The alternative may be assistance leading to the establishment and operation of a viable marine chemicals complex in Iceland, on a pilot basis to start with. The cost of this stage is mentioned in Annex IX of the Technical Report.

As already mentioned, both alternatives are likely to cost more or less the same. The first approach will not only take much time, but will produce only a report. The second approach will be quicker, and at the end of the exercise there will be an actual plant in full working order. Put in this way, the choice would appear to be rather obvious - the decision to go in for a pilot plant, rather than a further theoretical exceeise. We recommend the freezing process, to manufacture sodium sulphate and a portfolio of related chemicals.

121. If the demand arises, Part II of this Report will be prepared, to support an application to the Special Fund for technical assistance.

122. It is also recommended that this Report be submitted to the Government of Iceland.

123. It would be no exaggeration to say that the Mission was overwhelmed by the helpfulness, cordiality, sincerity and kindness of everyone contacted in Iceland. So many gave unsparingly of their time and energies that it would be invidious to mention only a few by name. Nevertheless, we would like specifically to acknowledge with gratitude the strong support, guidance and helpfulness of Mr. Steingrimur Hermannsson, the Director of the National Research Council. He proved to be a real tower of strength to the Mission which, in consequence, lacked for nothing to complete its tasks in the limited available time. In most cases, Mr. Hermannsson himself undertook the programme arrangements and thus made matters very easy and smooth. Next to be mentioned is Mr. Baldur Lindal, who had conducted many investigations in many technical subjects over many years in Iceland, and has accumulated a vast amount of valuable information, which he placed unreservedly at the disposal of the Mission. His timely counsel at points of difficulty proved invaluable. Finally, the Mission is deeply grateful to the resourceful, energetic and well-informed Mr. Sigurdur Hallsson, who took us around to most of the places, generally in his own car, over roads which were in poor condition, to say the least. Mr. Hallsson proved to be a mine of information on Icelandic matters and in several aspects of chemical engineering. His quickness of grasp, balanced judgement and forthright views were of much service to the Mission. Many of the arrangements for the Mission were

deputed to him, and he executed them most competently. To the many others who were of service to us we wish to offer a collective and sincere thanks.

B. Thiagarajan

(B. Thiagarajan)

Seawater Chemicals Mission to Iceland

UNIDO

NEW YORK

25 August 1967.

(Revised September 1968)

Seawater Chemicals Mission to Iceland, 1967
Summary and Conclusions

201. Seawater contains mainly the chlorides, sulphates and bromides of sodium, magnesium, calcium and potassium. When seawater is evaporated in the open air or by boiling, the sequence of solid products formed is calcium sulphate (gypsum or anhydrite), sodium chloride (common salt), and mixed salts. However, when seawater is frozen, it first forms pure ice and thereafter sodium sulphate, sodium chloride and mixed salts.

202. In normal markets soluble sulphates are worth more than chlorides. For instance, sodium sulphate (anhydrous) is worth from five to twenty times as much as sodium chloride. Therefore the best commercial exploitation of seawater would be the maximum production of soluble sulphates, mainly the sulphates of sodium, magnesium and potassium.

203. It is therefore suggested that a plant be set up in Iceland to manufacture sodium sulphate from seawater. In the first stage this could be effected by simple freezing to about -13°C. Processing of the residual brine by heating and cooling will result in the manufacture of sodium chloride and salts of magnesium, calcium and potassium. Bromine is also a likely commercial product. In this phase, some 10,000 tons of seawater could be processed daily, with production of about 10,000 tons of sodium sulphate and 80,000 tons of sodium chloride per annum, plus lesser quantities of other chemicals. In a second phase, the chilled seawater (or residual brine) will be used to dissolve gypsum, to enhance the output of sodium sulphate to about 30,000 tons per annum; other subsidiary processes could also be introduced such as recovery of bromine and manufacture of caustic magnesia. In a third phase, the intake of seawater could be increased ten times to 100,000 tons per day, leading to the production of 100,000 tons of sodium sulphate and 800,000 tons of common salt per year (plus proportionate quantities of other related chemicals). The production of sodium sulphate can be increased (at the expense of the sodium chloride) to about 400,000 tons per annum by dissolving gypsum in the brine.

204. Since the intake of the factory would be seawater, and the output would be the same seawater (although separated into its chemical constituents), the theoretical change in energy state is small. With theoretically perfect heat exchangers a cyclic process could be established which would need little

extraneous energy for it to keep functioning in perpetuo. However, in practice there will be considerable frictional loss. The exact amount cannot be stated without elaborate designs and computations, but it would be common prudence to provide for an overall loss of energy in the order of 30-35 per cent. Thus, if 3.5 million tons of freezing capacity is used in the cyclic processes over a whole year, nearly one million tons could be lost, and the corresponding amount of energy needs to be introduced from outside. Both heat as well as cold can be used as sources of energy, alone or in combination.

205. The main source of energy for this project in Iceland is expected to be geothermal steam, which occurs abundantly in Iceland with temperatures ranging up to 260°C. It is necessary to use this steam for both generating the refrigeration as well as for evaporating water from residual brines. There are at least three general ways of using the steam:

(1) To drive turbines, which in turn will drive the refrigerator compressors. Residual steam and hot water will be used for boiling of residual brines;

(2) To drive turbines, which will drive an electrical generator, and use the electricity to drive the refrigerator compressor. Waste steam will be used to boil down residual brines;

(3) To use the steam in an absorption refrigeration system without turbines or generators or motors or any other moving machinery to create refrigeration. There will be no waste steam.

Of these three possibilities we favour the absorption refrigeration system based on the Platen-Munters principle, without transfer pumps.

206. Steam by itself is a completely sufficient source of heat energy and the vaporised refrigerant can be condensed against atmospheric air or running water. In Iceland there will be unlimited quantities of seawater, and a certain amount of water from rivers and wells. The availability of huge amounts of ice in the glaciers of Iceland permits steam to be used much more thoroughly and efficiently. Since geothermal steam is inherently a wasting asset, and in view of prospective expansion of plant, it is advisable to foresee steam conservation measures from the very inception. Accordingly we suggest that glacial ice be used as the heat sink. Detailed justification of this important recommendation will be found in the text of the Report.

207. As for the refrigerant, the best choice would appear to be ammonia, which is already under manufacture in Iceland. The generator would be heated with steam at 100°C or higher, and the condenser of the refrigerator would remain (in ice water) at about 0°C throughout. Whether the steam for the brine evaporators will precede or succeed the ammonia system is a matter of design detail.

208. There are at least three places in Iceland where all conditions appear to favour the establishment of a marine chemicals complex, based upon the freezing of seawater and subsequent processing of the brine. One such locality examined physically was the Solheima Jokull glacier, an offshoot of the Myrdals Jokull. The field examinations fully confirmed the apparent suitability of the location.

209. The plant will comprise three major sections -

(1) Seawater induction, treatment and processing;

(2) Ammonia refrigerating cycle, using geothermal steam and the ice produced by the seawater freezing;

(3) Supplementary cold from glacial ice sources.

210. A plant processing 10,000 tons of seawater per day would yield per year about 10,000 tons of sodium sulphate (anhydrous basis), about 2000 tons of potash chloride and about 12,000 tons of magnesium chloride, plus about 80,000 tons of common salt.

211. Of these products, most of the common salt would be absorbed within Iceland, mainly for fish preservation. The potash would be all used up in agriculture. The magnesium chloride would be used up locally in making magnesia refractories for the cement, aluminium and fertilizer factories. The soda sulphate will find a ready market in nearby Scandinavian countries for use in paper pulp manufacture. There is therefore no major problem to be seen in disposing of any of the products, although, of course, a proper market study is essential in due course.

212. The capital cost of the project is likely to be between $2 and 3 millions, exclusive of infra-structural expenses such as roads, electric transmission lines, houses, etc. The gross income is likely to be about $1.6 millions giving a capital/output ratio of about 1.3 to 2.0. At full commercial scale of production the capital/output ratio is likely to approach 1.0. The total employment in this project would be about 120 in all, exclusive of infra-structural personnel.

213. At the request of the Icelandic National Research Council, the Mission investigated a proposition (the Lindal Scheme) to manufacture common salt, potash and various other chemicals from subterranean thermal brines by multi-stage flash evaporation. The proposition appeared to be sound, and deserving of further examination.

214. Also at the request of the Icelandic National Research Council, the Mission examined a proposition described three times since 1959 (Lindal-Patel Project) to manufacture common salt from straight seawater in multi-stage vacuum evaporators, using geothermal steam and vapour recompression intermediate stages. This proposition did not possess some of the attractions of the other two propositions: nevertheless, since such schemes exist in many parts of the world, and have been thoroughly explored, the Mission felt that there was sufficient justification to have it examined as well.

215. In the opinion of the Mission therefore, all three propositions investigated are sufficiently promising to merit further examination and preparation of project reports in order of priority. The first two propositions (called for short the Thiagarajan and the Lindal projects) would need ground surveys and drillings to prove the geothermal resources underground in the specific locations which are suitable. The Patel proposal can be implemented wherever steam exists in proximity to the seacoast. The cost of the further studies and investigations were roughly estimated to be as follows:

	US $
Thiagarajan Scheme	400,000
Lindal Scheme	300,000 1/
Lindal/Patel Scheme	30,000
	730,000

In the opinion of the Mission, there is sufficient material to indicate that the freezing process should have first priority.

216. It would be advisable to set up in Iceland a separate entity responsible for implementation of decisions. This body could draw upon the United Nations resources to formulate short-term, medium-term and long-term goals and plans.

1/ If undertaken along with or following the Thiagarajan Scheme investigations, the cost of further investigations of the Lindal Scheme might be reduced to $200,000 or less.

Terms of Reference
Seawater Chemicals Mission to Iceland

1. The Mission will investigate and report in as much detail as possible on the following:

   1.1 The proposition to manufacture sodium sulphate, common salt, magnesium salts, potassium salts and other products from seawater by the use mainly of glacial cold, geothermal heat and electric power.

   1.2 The proposition to use the subterranean brines in Reykjanes and its neighbourhood to manufacture sodium chloride, potassium salts, and other products, by the use mainly of geothermal heat and electric power.

   1.3 Incidental to 1.2 above, the proposition to use seawater directly with geothermal heat.*/

   1.4 The measures needed immediately to verify data and deductions and collect additional data necessary for deciding further action.

2. The Mission will indicate in outline the technological and commercial possibilities of using the direct products of the marine chemicals industry to manufacture derivatives, both for the internal market, as well as for export, making best use of the internal resources of the country.

3. If in the course of its investigations the Mission comes across any other possibilities of industrial development, it will be appreciated if these are listed in a separate report.

4. The main report will touch upon:

   4.1 Economics of production

   4.2 Applicable technology, and

   4.3 Stages of project implementation.

5. The main report will include recommendations for further action by, *inter alia*

   5.1 United Nations and

   5.2 Iceland.

The recommendations will include steps to be taken immediately as well as in the longer terms, both medium and distant. Some indications of the financial implications are needed.

---

*/ Not necessarily at Reykjanes.

I. Introduction

301. There was a demand within Iceland for about 50,000 tons of common salt per year, mainly for fish preservation. All this salt is being imported, at a cost of nearly US $1 million per year, mostly in foreign money. Since Iceland has over 3000 miles of coastline, and large resources of subterranean hot water and steam, investigations had been going on for several years past to ascertain whether it would be economic to manufacture common salt for fishery purposes in Iceland by the use of geothermal energy. In 1959 an Indian Consulting Engineer, Dr. M.S. Patel, was despatched by the USAID organisation to Iceland to prepare a pre-investment study. The Patel Report[1/] was in favour of a scheme using a conventional triple-effect vacuum evaporator to boil down seawater.

302. In pursuance of the Patel recommendations, in 1960 the Government of Iceland obtained through the United Nations Technical Assistance the services of the Manistee Engineering Associates of the USA to prepare a project report. The Manistee Report[2/] confirmed Dr. Patel's Report, and recommended further action.

303. At about about that time, Mr. Baldur Lindal an Engineer in the service of the State Electricity Authority[*/] who had done most of the pioneering work on which the Patel and Manistee reports were based, was making special investigations on a hot salt spring in Reykjanes. This spring had a salinity of about double that of seawater, with a composition different from seawater. In collaboration with Mr. Vilhjalmur Ludviksson, Mr. Lindal[**/] prepared two reports on the subject for the Icelandic National Research Council. In the first report[3/] he recommended a large complex of industries ramifying from the availability of this brine, together with geothermal steam, electric power, shell sand, and other local resources. The whole complex appeared to be so large as to be beyond practical implementation at that time, so Mr. Lindal prepared a second draft[4/] limiting the schemes to the manufacture of common salt and potash, both to meet only the internal requirements of Iceland.

1/ Reference 120.

2/ Reference 114.

*/ Presently a private consulting engineer.

**/ By that time in private practice.

3/ Reference 113.

4/ Reference 111.

304. All these four major projects suggested in the recent past for the establishment of a seawater salts industry were based on evaporating seawater by geothermal steam. Three reports suggested multi-stage vacuum evaporators while the fourth went a little further and included provision for flash evaporation, with 16 intermediate stages. The calculations indicated marginal profitability.# All these projects depended upon air or seawater or river water as the heat sink, which would condense the water vaporized from the seawater. All these heat sinks are subject to some seasonal fluctuations in temperature, and even availability. Accordingly, these schemes had been designed for the most unfavourable possible combination of circumstances, and under normal working conditions, therefore, they would have much under-utilized capacity or slack.

305. Meanwhile, the Basic Chemicals Unit of UNIDO had been making extensive studies of the occurrence of salts in seawater, and the possibilities of extracting these salts on a commercial basis. Some discussions with the Icelandic authorities resulted in an invitation to check the application of the technological principles to the conditions actually prevailing in Iceland. One possibility was to subject seawater to intensive freezing. The practice has always existed in cold countries,1/ and in Iceland itself in pre-historic days the inhabitants had made salt by freezing seawater. However, nowadays the natural cold of winters would be too unreliable a factor for commercial processes, so a certain amount of control was essential. In order to operate the process on a commercial basis it was necessary to have a source of energy - heat or cold. It turned out in the course of UNIDO's further examination that the unique combination of large glaciers reaching down to the seabeaches, and enclosing or covering or rubbing up alongside immense sources of subterranean heat seemed to offer remarkably attractive conditions for extraction of several valuable chemical products from seawater. There follows in this Report the data accumulated by the Mission and the conclusions derived therefrom. In such a short period as a fortnight it was impossible to work out a feasibility study, nor would such a study have served useful purpose at that stage. It is suggested, however, that after this report has made its impact, one of the very next steps should be the preparation of a detailed feasibility study on the lines recommended herein.

A recently-designed plant has 68 stages - see "Chemical Engineering" Vol. 75 No. 15, 1968 (Page 86).

1/ Reference 52, page 775.

II. Seawater as a Source of Chemicals

306. Seawater contains every element on earth, in proportions remarkably similar all over the world.*/ The principal ionic constituents may be taken as follows:

Cation	Parts per million	Anion	Parts per million
Sodium	10,600	Chloride	19,000
Magnesium	1,300	Sulphate	2,700
Calcium	400	Bromide	50
Potassium	360	Other	15
Other	100		
Total	12,760		21,900

The total solids in seawater (3.466 per cent in the above) can vary from place to place, but not a great deal. The variation, though small, is of immense importance in oceanography, but not to extraction of chemicals. Seawater is a substance of marvellous complexity. It contains every elemtn known on the face of the earth (except a few laboratory curiosities) in such inextricable combinations that to this day nobody has been able to reproduce seawater synthetically. The sea, the sun, the air and the earth are all in the closest possible dynamic association, responding fairly quickly and completely to small changes, while preserving the overall conditions unaltered. One of the marvels is how the composition of the sea has remained unchanged through geological ages, despite the fact that the composition of the salts in river waters is quite different from those in the sea. Another somewhat surprising fact is that the proportions of salts in the sea are almost exactly the same, in all parts of all the oceans. It is this uniformity of composition which permits the application of results gathered in one place to any other place.

307. (1) The anions and cations of seawater can combine together in different ways to produce different salts. Where seawater is exposed to the sun and wind for free evaporation at ordinary ambient temperatures (as in solar evaporation) the sequence of salts produced will be as mentioned in Annex II. The important range may be illustrated as follows:

*/ See Annex II for some detail.

Table 1

Product	Range of densities (Beaume degrees)				
	3	5	12	25	27
Iron oxide	3	5			
Chalk (calcium carbonate)	3		12		
Gypsum (calcium sulphate)			12		27
Sodium chloride				25	
Magnesium sulphate*/				25	
Magnesium chloride*/				25	
Sodium bromide					27

The chief features of this sequence is that most of the 400 ppm calcium is eliminated at an early stage, taking with it 1000 ppm of the sulphate. Next follows the major product, sodium chloride. There is left a residual brine containing everything else.

(2) When seawater is boiled down, a certain amount of water evaporates, after which salts are deposited. The kind of salts produced, and their sequence are more or less the same as under solar evaporation, i.e. calcium carbonate, calcium sulphate, sodium chloride, magnesium salts.

308. But when seawater is subjected to freezing, the course of reactions is different.1/ The full sequence has been worked out by Ringer and confirmed by Nelson and Thompson.2/ The first product of freezing (beginning at -2.2°C or 28°F) is ice, and only ice forms**/, until by about -8.3°C (17°F) about 88 per cent of the water has been eliminated, leaving a strong brine, practically at the point of crystallisation. All the ionic constituents of seawater are left in the brine, which by now has become concentrated about tenfold, relative to seawater. Upon further cooling, sodium sulphate begins to crystallise (with 10 molecules water of crystallisation), and continues to crystallise, until the brine temperature reaches -23°C (-9°F), by which stage almost all the sulphate in the seawater has been crystallised out as sodium sulphate. Further freezing results in a series of salts, but since they do not enter into this particular project plan, they are not described herein. The full production of sodium sulphate can reach 4000 parts per million of seawater (calculated on anhydrous basis). This theoretical maximum is, of course, unattainable in commercial

1/ See Annex II-D.

2/ Reference 31.

*/ Small quantities, really contaminants or occlusions: the main quantities remain in solution in the residual brine.

**/ With occlusion of brine.

practice, but a yield of 3500 ppm is a practical target, and is reached by the stage the brine reaches -13°C (8°F), a temperature which is quite readily realisable.

309. The yield of sodium sulphate is only about 0.35 per cent of seawater: hence, roughly 300 tons of seawater must be processed to yield one ton of sodium sulphate. As a process for manufacturing sodium sulphate alone this may not be economic, but because there are other recoverable salts in seawater, under suitable conditions the process becomes commercially attractive. In countries with demand for both sodium sulphate as well as sodium chloride, and having free access to rock salt, the sodium sulphate may be worth five to twenty times as much as the sodium chloride. In Iceland, the first 50,000 tons of sodium chloride may be absorbed locally at relatively high prices, but thereafter the normal ratios will prevail. It is obvious, therefore, that it would be far better for Iceland to manufacture sodium sulphate than sodium chloride. The proposals to boil down seawater therefore will not command first priority.

310. Cold concentrated seawater has the capacity to dissolve calcium sulphate (gypsum or anhydrite) and this sulphate ion can produce more sodium sulphate. The best working conditions remain to be determined by actual test, but it may be possible to cause a three-fold increase in sodium sulphate content by this means. If only Iceland had deposits of gypsum this would be a fine process, but Iceland has no gypsum. Imported gypsum or anhydrite would cost $10 per ton, but even at this rate there is profit to be made, and certainly this is one of the steps which must be seriously considered.

311. After the sodium has been removed from the brine, the latter exchanges its cold with fresh seawater in stages and is then boiled down to recover common salt. Ordinary multi-stage vacuum or flash evaporation could be used for the purpose, and the technique is well known. However, a fairly heavy capital investment is required, and a good deal of maintenance is also needed. The evaporation consumes power, in addition to steam. In this particular case, therefore, it may be better to use a simple grainer pan for evaporation. The grainer pan is just a flat tank fitted with steam coils and often has an elevator boot to take out the solid salt, to reduce labour. The grainer pan

is simple and cheap to construct, and can be made for very little operational or maintenance work. Best of all, the salt it produces is coarse-grained, good for fisheries purpose, whereas vacuum pan salt is fine-grained, and would require compaction.

312. Once the major part of the common salt has been extracted from the brine (by any of the three methods mentioned) the further processing could follow as below:

(a) Treat with chlorine to extract the bromine

(b) Add potash and chill, to recover carnallite

(c) Boil down brine for calcium chloride and trace elements

(d) Decompose carnallite into potash and magnesium chloride and extract them separately.

All these processes are more or less conventional and predictable.

313. The manufacture of maximum sodium sulphate from seawater requires:

(1) the separation of water from seawater by a process which will not cause gypsum to precipitate. (The only known practical process is freezing)

(2) the further freezing of the seawater to yield sodium sulphate.

There is an alternative route available, namely, to evaporate seawater (after chemical separation of its content of calcium), allow common salt to form, and then expose the residual brine to freezing. This would reduce the freezing load considerably, but would increase the demand for steam. This alternative was not investigated by the Mission, because the direct freezing process appeared to offer better prospects. Lack of time prevented consideration of other similar possibilities. If, however, the detailed investigation of freezing seawater directly indicates lack of promise, then, indeed, it may be worth following up the alternative possibilities.

314. Artificial refrigeration is quite costly, and sodium sulphate is a comparatively cheap chemical, so it is commercially impractical to freeze 300 tons of seawater down to -23°C just to manufacture one ton of sodium sulphate. However, the depth of refrigeration needed for this process occurs naturally during winters in the higher latitudes of the world and often the cold is preserved in glaciers and perma-frost. These climatic circumstances have been used occasionally in the past for manufacture of sodium sulphate, e.g. by

spraying seawater into very cold winter air and collecting the crystals which form. Such manufacture has been conducted sporadically and rather unscientifically.*/ A proper commercial venture would make a sound theoretical analysis, identify the important parameters, and then prepare designs which make best use of all existing natural circumstances, supplemented by artificial aids.

315. Out of the 34,000 ppm of salts in one million parts of seawater, removal of 3500 parts of sodium sulphate will still leave nearly 90 per cent of the salts in the form of a concentrated brine. This brine lends itself to very simple methods of treatment. One obvious line is to increase the output of sodium sulphate as mentioned in paragraph 310 above. Alternatively, simple boiling-down in open-air grainer pans will yield 20,000 parts of common salt as large grains suitable for fish curing. When the mother liquor from this stage is treated with magnesium carbonate, it results in the almost complete removal of calcium as carbonate, and also the removal of minor ingredients like strontium and borate. The residual brine now contains only sodium chloride, magnesium chloride, and a few elements in smaller quantity, like potash and bromine. Treatment of this brine with potassium chloride results in nearly complete removal of the magnesium as carnallite, leaving a brine consisting essentially of sodium chloride alone. This brine is returned into the sodium chloride system for crystallisation. The flow sheets illustrate the various stages. At a later stage, a bromine recovery stage could be added.

316. Basically the processes suggested are simple and inexpensive. They depend for success entirely upon the availability of geothermal heat and glacial cold, both of which Iceland possesses in abundance. However, it can be readily perceived that there are several important physico-chemical problems involved, combined with other engineering problems. Some of the processes to be employed are unconventional, and much of the design will have to be done ad hoc. However, with the correct design and proper application, success is likely and there will be good prospects for this industry in Iceland.

317. Iceland's relatively mild climate calls for secondary refrigeration. A comparatively short distance away, on the east coast of Greenland, the natural cold is so great that no such devices would be necessary, and simple exposure to air would suffice. However, there may be disadvantages in some other respects, especially the difficulty of retaining technical personnel in such an inhospitable environment.

---

*/ Cf. paragraph 305 ante.

III. Process Design Considerations

Concentration of seawater by freezing

318. (1) From the foregoing it will have become evident that the freezing process would result in production of chemicals of greater value than by the boiling process. On the other hand, the freezing process is also the more expensive, so that some calculation is needed to ascertain which process would yield greater net advantage to the country in future. In this Report, we consider the freezing processes first.

(2) From pre-historic days the inhabitants of polar countries have known that seawater exposed in shallow ponds to winter cold can yield various salts. The Icelandic sagas themselves recount this as a systematic means of manufacturing salt in ancient days. More often, seawater was allowed to freeze, and the resultant ice was removed, leaving a concentrated brine, which was then boiled down for salt. The practice spread, and was widely current at one time. The great French chemist Balard in 1829-1850 used winter cold to manufacture a whole series of salts from seawater residues in the French Riviera.[1] Subsequently the process was introduced into the German salt works at Stassfurt, and in the 1870's many thousands of tons of sodium sulphate were manufactured by exposing brines to winter cold.[2] Sometimes the brines are sprayed into the winter air to ensure quicker cooling.[3] Because winter cold was often inadequate and always unreliable, it was often supplemented by mechanical refrigeration. Thus, as a scientific principle, the manufacture of sodium sulphate by freezing of seawater can be said to have a long and honourable history, so there is nothing novel or questionable in the principle.

319. Like many processes invented in the early days of the chemical industry, this freezing process soon met fierce competition, both from cheap sulphur as well as from cheap pyrites. The Hargreaves-Robinson process of manufacturing sodium sulphate from flue gases and common salt was especially successful. Eventually, the seawater freezing method fell out of favour and today probably survives only under specially favourable conditions. Some common salt works may still be continuing the practice, since all the cost of producing this

---

1/ Reference 22, page 20.

2/ Ibid, page 24

3/ Reference 52, page 755.

brine would have already been recovered on the main product, common salt, but in most cases there would have been no economic justification for subjecting seawater to freezing only for the sake of manufacturing sodium sulphate, because the cost of refrigeration would have been far too high.

320. There has been a remarkable transformation in the situation in recent years. The USA has devoted enormous efforts to the extraction of fresh water from saline waters, and especially from seawater. One major line of research was freezing out pure ice from salines. The Office of Saline Water, Department of the Interior, has published many reports directly bearing on this process.1/ Many more sponsored researches have been undertaken, and the reports have been published elsewhere. One of the most valuable of such reports is that by Nelson and Thompson in 1954.2/ Following the lead of the USA, many other Governments have become keenly interested. The United Nations has conducted a large and important Seminar on the subject, and published a long report, mentioning the efforts made by many countries.3/

321. As can be seen, very extensive work has been done in recent years on freezing of seawater. Unfortunately, for our purposes, in most cases the freezing was discontinued by the stage of 40 to 50% concentration, long before there was any chance of salts being produced. The reason is that as the brine became stronger and stronger, its freezing point becomes lower and lower, and the costs of further freezing grows greater and greater. Since the cost of freezing is one-seventh as much as the cost of boiling4/ and as the only consideration was production of fresh water, it was more economic to discard brine when it was only half saturated. However, the large number of theoretical and practical studies is a source of information of inestimable value. As regards the efficacy of the freezing process, in 1955 it was stated that

> "A preliminary laboratory test (of counter-current washing) with eleven contacting stages gave an 80-90% yield of potable water of 14 ppm salinity, and 10-20% of waste water with 190,000 ppm salinity."5/

1/ See references in Appendix I, Part II

2/ Reference 31

3/ Reference 49

4/ Reference 83A, page 241.

5/ Reference 61, page

Rapid advances have been made since then and efficiencies are much improved. Thus, even before the Mission set forth for Iceland it was known that the manufacture of sodium sulphate from seawater by freezing was technologically familiar, but required strong techno-economic examination to determine its commercial feasibility in the Icelandic context.

322. (1) The scales of production found in the model designs of the USA range from 2.5 million gallons a day to 50 million gallons per day (3-1/2 to 70 million tons per year) of water produced. The smallest unit for which detailed cost estimates were produced approximates to double the size suggested for Iceland as the initial stage; hence the figures may be taken as generally applicable. Of course the object of the exercises of the Office of Saline Water was the production of fresh water, and the freezing was taken only down to the point when about half the water in seawater had been frozen out: however, these results are fully applicable to the recommended Icelandic project, with minor reservations.

(2) It turns out that a complete plant for the freezing of seawater on the scale needed in Iceland would cost in the neighbourhood of about US$3-1/2 millions, and the fresh water that is produced would cost in the region of 60 cents per 1000 gallons i.e. about 15 cents per ton. The operation costs are on the high side, and we therefore sought means of reducing the costs.

(3) The existence of large glaciers in Iceland appeared to offer a cheap source of freezing energy. The direct application of ice to seawater (through an intervening separator) would not be of any use, because ice at normal pressure in contact with pure water melts at 0°C, whereas what is needed is a means of reaching a temperature of -23°C, or at least -13°C. Simple pressure applied on the ice would reduce its temperature and melting point, but the amount of pressure needed to reach -23°C would be quite high. Such pressures are in practical use, for example, in the reverse osmosis process of desalination, but are by no means easy to apply. Another and simpler method is to dissolve common salt in the ice. When about 20 to 25% salt dissolves in the ice, the temperature of the solution is reduced to about -23°C. This freezing mixture, when applied to seawater in successive stages with intermediate recovery of the cold of the previous stage, would effect the desired purpose. This has actually been done on a pilot plant basis[1/] and has been seriously

1/ Reference 83A, page 110.

proposed for commercial operation, but there are practical difficulties in dividing the entire freezing effort into small incremental stages, and recovering the cold energy of each stage separately. Hence, we considered that a further alternative should be investigated.

The Sources of Energy

323. (1) The operation of the recommended process depends upon the stagewise freezing out of fresh water ice from seawater, followed by the deeper freezing of the resultant concentrated brine to yield sodium sulphate. Pure water freezes at 0°C (32°F). Seawater, however, (with about 3.5% dissolved matter) begins to freeze only at about -2.2°C (28°F). Deeper and deeper freezing is required to cause more and more ice to form. At about -8.3°C (17°F) about 88% of the seawater has turned into ice, and the residual brine is ready to form sodium sulphate on further cooling. The production of sodium sulphate is almost complete by about -23°C (-9°F).

(2) In commercial practice, it would not be economical to take the brine down all the way to -23°C. It would probably suffice to reduce the brine temperature to about -13°C (9°F), at which stage some 92% of the sodium sulphate will have crystallized out. A little of the sulphate originally brought in by the seawater will be left in the brine. This, however, can be ignored, as in commercial practice it will not be thrown away, but will be recirculated or sold as "residual salts".[1/]

(3) Again in commercial practice, it would be economical to dissolve some mineral gypsum in the cold brine to increase the output of sodium sulphate. Theoretically, the yield of sodium sulphate could be doubled or trebled without considerable side reactions. Sodium sulphate is more valuable than gypsum; hence, the usefulness of this step. Naturally the yield of sodium chloride will be correspondingly reduced, but of all the products of this industrial complex, common salt would be the cheapest, so it is all to the good to lose sodium chloride and gain sodium sulphate.

(4) The cooling of seawater can, of course, be effected by simple mechanical refrigeration only, without any other supplement, but such refrigeration

1/ See paragraph 363 (..)

is fairly costly - of the order of 50 to 60 cents per ton of freezing, or even more. Even allowing for 70% recuperation of the cold values, it would still cost 15 to 20 cents per ton of refrigeration. An Icelandic consultant, Mr. Svenn Einarsson, estimates the energy cost of the compression refrigeration system to be 4-6 cents per ton, using geothermal steam. The cost of ice was mentioned as 14.5 cents per ton.[1/] Assuming that 300 tons of refrigeration (of seawater) are needed per ton of sodium sulphate (anhydrous basis) and that half the cost is borne by the sodium sulphate (the other half by other products), mechanical refrigeration would cost about $20 to $30 per ton of sodium sulphate. This is too costly for the production step; hence, full mechanical refrigeration was not regarded as too promising. Indeed, if simple mechanical refrigeration could yield sodium sulphate at economic rates, Iceland would have no competitive advantage at all, and whoever wanted sodium sulphate in the world would make it himself by freezing seawater.

(5) Our proposition was, therefore, to consider using the reservoirs of geothermal heat and the cold locked up in the Icelandic glaciers in a commercial process to freeze out fresh water from seawater. Two questions arise in this connexion: firstly, will there be sufficient ice in the glaciers throughout the year; and secondly, can the cold be extracted and applied to the seawater economically. The first question is discussed later in this Report[*/]

Thermal Considerations

324. Most of the cold put into the seawater ice is recoverable in suitable heat exchangers through a suitable device, using a liquid transfer agent. If the exchange of cold were complete, the whole system would be practically self-contained, seawater entering the system and products leaving the system, at the same temperature, with very little net energy supply. In actual practice losses are to be expected at several points. The amounts of losses cannot be predicted, but as a first approximation we are taking an over-all loss of 30 to 35% of the cold requirements, which must therefore be kept supplied continuously. In simple terms, if it is intended to process about 3-1/2 million tons of seawater, some 3.3 million tons of ice will have to be frozen out of

---

1/ Private communications dated 20 July 1967 and 3 August 1967

*/ Paragraph 387

the seawater. This would theoretically call for the use of 3.5 million tons of ice equivalent. Of this quantity, in actual practice about 1 million tons will have to be new ice equivalent, the rest being recovered from the system and recirculated.

The ice has to be applied to the seawater as a refrigerant aid. It is costly to excavate and transport millions of tons of ice. Fortunately, it is not necessary to do so. One way of avoiding ice transport is to produce a refrigerant from the ice capable of freezing seawater down to -23°C. One idea was to sprinkle solid salt over the surface of the glacier. The salt and the ice would combine of their own to form a liquid mixture, with temperature down to -23°C (-9°F), and containing about 20 to 25% salt. This idea was the simplest, but the difficulty of recuperating the salt was too great. The one million tons of ice would have dissolved 200,000 tons of salt. This is far too large a quantity to be thrown away, so it has to be recovered and re-used. It is necessary, therefore, that the brine be evaporated (e.g. with geothermal steam) to yield solid salt continuously. There will, of course, be a steady frictional loss of salt from the system, but the quantity and cost would be small and within acceptable limits. Where steam is expensive, such evaporation is generally done in multi-stage evaporators, in which every pound of new steam can result in evaporating several pounds of water. However, such plant is large and costly, and would need a good deal of attention. In Iceland it is assumed that large quantities of a low-grade steam would be available at low cost, of the order of 10 to 15 US cents per ton. Hence, it might have been practicable to apply the steam in simple grainer pans, in which there is no steam recovery or re-use. For every ton of sodium sulphate produced (i.e. 300 tons of ice) 100 tons of water have to be evaporated: hence, at least 100 tons of steam. At 15 cents per ton of steam, the steam cost per ton of sodium sulphate manufactured would be $15. Only about half this cost should be booked against the sodium sulphate, for the residual brine is at least as valuable as the sodium sulphate. Furthermore, at least part of the steam can be recovered and used. The hot water which results may also have some value in space heating. On the other hand, heat transfer efficiencies are never 100%. Also, there is a certain amount of equipment cost in transferring the heat. Taking both credits and debits into account, the figure of $15 steam cost per ton of sodium sulphate may be allowed to stand, until more accurate figures are available. The cost is within reasonable bounds. However, due to the theoretical

and practical difficulties involved, this method was not pursued very far pending examination of freezing by use of secondary (transfer) refrigerant or otherwise.

325. Seawater enters the system and seater components leave the system to the exact equivalent. The separation is effected mainly through refrigeration in stages. Several choices are possible. For instance, a partial vacuum could be created over the seawater by a steam jet ejector and this would evaporate the seawater and also cool it down to any desired degree. Such processes are well documented.[1] There are several advantages in such a system - simplicity of plant and control mechanisms, flexibility of operations, quick and direct effects, little loss in energy transfers, use of low-pressure steam, non-contamination, no moving parts, simple maintenance, no high-pressure pumps or pipes, no expensive transfer refrigerants, etc. Where ice is available for vapour condensing, the efficiency will be very good. But there are disadvantages as well, mainly non-recoverability of latent heats, large volumes of vessels and piping, less and less efficiency with lowering temperatures, large quantities of steam required, waste of a good natural resource, etc. Where low-grade steam is abundantly available, and where the hot water which will be produced can be used profitably (e.g. for space heating), there may well be an economic future in such a process. The area around Reyjavik appears to fulfil most of these pre-conditions. For want of time and access to references the Mission had to leave this element of study to a later stage. Since there has to be close liaison with municipalities and the buildings industry such a study had best be done by a firm of qualified and experienced consulting engineers.

(2) The more common freezing process is to apply a refrigerant to the seawater. Refrigerants can be used in direct contact with seawater. The refrigerant (usually some fluorocarbons or the lower-carbon hydrocarbons like propane and the butanes) are usually cheap and freely available and, since the ice produced need not be of potable quality, the plant can be considerably simplified. The Office of Saline Water in the USA has set up an experimental plant with an output of 1000 tons per day.[2] However, the regeneration of the

---

1/ Reference 83A, page 244. A demonstration plant is functioning in Israel. See also reference 75.

2/ Reference 74; and reference 83A, page 242.

refrigerant and its recirculation calls for plant with many moving parts and requiring a considerable amount of continuous attention: therefore it is proposed to consider also the use of an indirect refrigerant, transferring heat and cold through metal walls. In such a system, the refrigerant in the form lf a liquid is made to evaporate inside a container of some kind. The heat required for the evaporation is taken from outside the container, and the material outside (in this case, seawater) is cooled down as a result. The vapour of the refrigerant is then subjected to a higher pressure, when it again condenses to a liquid, releasing latent heat. This latent heat is dissipated in some manner (e.g. to the air or to cooling water or to ice) and the cool liquid is again in a position to evaporate and exercise its cooling effect.

(3) Two important factors in this refrigeration process are:

(a) the creation of a pressure differential in the refrigerant between condensing liquid and evaporating liquid; and

(b) transfer of the material along the cycle of changes.

The use of a mechanically-driven compressor achieves both these purposes. The compressor compresses the vapour into a liquid, while a capillary tube holds the pressure and permits the liquid to enter the evaporator section at a controlled rate. This is the conventional method of creating refrigeration for all purposes. It is a standard process, well understood and applicable at any level of production. Its weakest point is the compressor and the motor. They have to work continuously and therefore require maintenance. Of course, there are machines nowadays which can work without attention for thousands of hours at a stretch: nevertheless no machine can be altogether foolproof, and some periodical attention to the moving parts is essential. A further weakness in this system is the need for bearings to hold and support the rotating axles. These require lubrication and are always liable to leak. Even a minute leak can allow a lot of refrigerant to leak away in the course of months or years. In the past few years compressor manufacturers have developed the so-called canned rotor, where there is a stainless steel shield encasing the armature of the electric motor integral with the compressor chamber, so that no leakage of compressed material is possible through the motor bearings. However, these motors have to sacrifice some efficiency, and are therefore costly in power.

In the Icelandic content it would be best to have a plant which can be left to itself for months at a time: hence the compressor system of refrigeration was not so attractive.

(4) The type of refrigerating process which best satisfies Iceland's requirements would appear to be the absorption system of refrigeration, using the molecular pressures of solutions. In this system the refrigerant fluid is vapourised and the vapour is absorbed by some material (solid or liquid) which has a strong affinity for it. Pairs in common use are ammonia/water, ammonia/calcium chloride, lithium bromide/water, various organic chemical pairs, etc. It is the evaporation of the liquid refrigerant which creates the cold. The vapour is absorbed by the affinity-pair, called the absorbent. When the whole quantity of refrigerant is evaporated, the action comes to a halt, and it is necessary that the refrigerant be regenerated. Usually simple heat will separate the refrigerant as high-pressure vapour, which can be readily condensed into a liquid by air-cooling or water-cooling. This process is therefore intermittent, and the absorbent material must be alternately heated and cooled down for it to exert its effect. If a semblance of continuous action is needed, it would be possible to have a series of such units, working in sequence, with a reservoir of liquid refrigerant, which would provide a continuous supply. Thus, while each separate unit would function intermittently, the refrigeration itself will be continuous and uninterrupted. This system has certain advantages, but there are so many moving parts and changing sequences that it would not be prudent to leave it to work by itself in a remote part of the country exposed to severe climatic fluctuations: therefore it was not regarded as being among the best choices for Iceland in this context.

(5) If the absorption system is to work continuously, it could be effected by using a transfer pump to move the refrigerant from the absorbing chamber into the regenerating section against the pressure of the hot refrigerant vapour. This is indeed, the common method adopted for domestic refrigeration based upon the absorption system. It suffers from the same disadvantages as the ordinary compressor system, which functions without absorbent. There is therefore not much advantage in choosing the absorption system with transfer pump in preference to a straight vapour compression refrigerator.

(6) The last device to be considered is the Platen-Munters variety of the absorption refrigeration system, of which the Electrolux is a typical example. In this device, there are three sub-systems:

(a) Generation of ammonia gas under high pressure from a strong solution of ammonia in water (aqua ammonia) by heat, and cooling of the vapour to form liquid ammonia, while the separated water vapour condenses and returns separately to the system;

(b) Transfer of liquid ammonia by gravity into the evaporator section, where it evaporates under a low partial pressure, generating cold;

(c) Transfer of the vaporized ammonia into the water system to re-form strong (aqua) ammonia, and return of the aqua ammonia to start the cycle again.

The partial pressure of ammonia vapour is reduced by providing an atmosphere of a permanent gas, usually hydrogen. This same hydrogen serves to transport the ammonia vapour from the evaporator into the absorber section. Hydrogen is the best of all the possible permanent gases because of cheapness, high thermal conductivity and low density. However, hydrogen diffuses through materials rather readily, and can also form explosive mixtures with air. It should be possible to use helium instead. It is non-inflammable and chemically completely inert, and nowadays it is in world surplus. The disadvantage is that it is twice as heavy as hydrogen, but this disadvantage is of no consequence in an Icelandic context because the height of the two gas limbs (plain hydrogen versus ammonia-laden hydrogen) can be of any length up to several hundred metres.

(7) The Platen-Munters system has no compressors or pumps or valves or any other moving part whatever, and therefore it is as foolproof as any system can possibly be. It can function continuously for many months on end without any attention at all. In the Icelandic context, therefore, it would appear to be best to concentrate attention on the Platen-Munters refrigeration cycle. It is not intended to imply that this is the only possible system, or that it is the best system for the Icelandic conditions. That it is a good and workable system is unquestionable, and that it could be applied to Icelandic conditions is certain. We had neither time nor the resources to review all the many possible systems in detail, and it is only for this reason that detailed consideration was limited to the Platen-Munters system. If the project reaches the stage where detailed estimates have to be worked out, we recommend that all the other systems be reviewed as well.

(8) In the absorption system of refrigeration the main requirement is a source of heat, which is needed to drive off the refrigerant vapour from its combination with its conjugate. This vapour is generated at fairly high temperature and pressure. The vapour moves from the generator into the condenser and is there cooled, so that the vapour is liquefied. The usual cooling arrangement is either air or the coolest available water (the heat sink). The design of the refrigeration plant has to be based upon the available factors, of which the most important are the temperatures of heat source and heat sink. If both these temperatures can be relied upon to remain fairly steady throughout the year, the design problems are to that extent simplified. If either or both temperatures are variable, the design must be based on the combination of the most unfavourable conditions, and this implies that for most of the time, when the temperatures are more favourable, the available capacities will be under-utilized. In turn, this implies excessive capital expenditure on plant, and corresponding fixed and operating charges. This point will receive detailed attention in a later chapter.[1]

(9) The Platen-Munters system is rarely used in large-sized plant or for industrial purposes. The reasons for this situation are obscure, but at least one reason is said to be the powerful influence of compressor manufacturers.[2] Extensive enquiries did not yield any serious objection to this refrigeration system, which appears eminently suited to the Icelandic situation.

Refrigeration Design Considerations

326. Elements of System - choice of refrigerant

(1) An important consideration is the choice of a suitable refrigerant. Some factors are as follows:

(a) The worksite will be remote, difficult of access, likely to become isolated in winter, and poor in transport and repair facilities. Hence the refrigerant must be as safe as possible.

(b) Large quantities of refrigerant would be required - maybe of the order of 100 tons or more. Hence cheapness would be an important point.

1/ Paragraph 359

2/ Ruppwright - "The Absorption System Comes Back" - "Refrigerating Engineering" 1937, 34, 93. See also Andersen (Reference 3A) page 193.

(c) The working range of available temperatures would be a generator temperature of about 100-120°C and a condensing temperature of 0°C. The saturation vapour pressures of the refrigerant must not be excessively high or excessively low in this range.

(d) Thermodynamic properties and chemical behaviour must be taken into account. Thus, the freezing point must be well below -30°C, vapour pressure at -30°C must be appreciable, the latent heat should be high, the liquid specific heat low, the vapour specific heat high, thermal conductivity high, viscosity low, chemically inert, heat-stable, neutral pH, non-corrosive, unreactive with metals, water, oxygen, or air, non-toxic, non-inflammable, strong smelling; etc.

(2) No single refrigerant can possess all these desirable properties to the full desirable extent, and hence the choice of refrigerants has to be based on a compromise. On this compromise a diversity of opinions is possible.

(3) The following refrigerants were briefly studied in this survey

Ammonia

Sulphur dioxide

Carbon dioxide

Sulphur hexafluoride

Freons (11, 12, 21, 22, 113, 114)

The physical characteristics of these refrigerants are briefly summarised in Annex V.

(4) On a balance of considerations, it was decided to recommend consideration on ammonia as the refrigerant of choice, with water as absorber and helium as carrier, if it is readily available at economic cost. If not, the more usual hydrogen could be used.

(5) Ammonia is already being manufactured in Iceland in relatively large quantities, and the small requirements of this plant can be readily met. It has a very high latent heat of vaporization. It is not readily inflammable. Its pronounced pungency of odour would provide ample warning long before a toxic concentration is reached. Its pressures within the fixed temperature range are substantial but not excessive. It has a high specific heat - higher than water, as a matter of fact. There was not a single major objection to the use of ammonia as the refrigerant. As for hydrogen, the Ammonium Nitrate Fertilizer Plant Inc. of Iceland manufactures hydrogen (for its ammonia synthesis), and is already piping a part of its production to a neighbouring fishoil hydrogenation plant. There should be no particular difficulty in securing supplies for the seawater refrigerating plant as well.

327. Choice of Coolant

(1) In any cyclic refrigeration system, the hot refrigerant vapour has to be cooled for regenration. One of the customary cooling agents is the air. It is available free of cost in limitless quantities and this is its chief advantage. Another great advantage of air-cooling is that the cooling unit can be situated quite close to the generator unit. A third major advantage is that the heat exchanger is a simple assemblage of finned pipes. But air as a coolant suffers from certain disadvantages. It has a low capacity for absorbing heat. Being gas, the rate of heat transmission is poor. It is often polluted and therefore corrosive. Its oxygen content is reactive. It is part of the climatic environment, and therefore subject to climatic fluctuations. Thus, the air may be quite still one day and blowing a gale on another day - the structures must be able to cope with both. The factor which most affects its cooling power is its temperature. In Iceland, for instance, the air temperature during winter may reach nearly -30°C[1] while in the height of summer the record temperature has risen to nearly 30°C. This wide fluctuation is, of course, most exceptional, but a range of 40°C between winter low and summer high is not uncommon. The plant has to be designed to function efficiently even with summer air of 20°C. For most of the time the available air would be much cooler, but the advantage is of no use if the plant is designed to function at full load with cooling air of 20°C. It calls for a certain amount of piping, heat exchange surface and the like, which would have to be nearly 50% greater than at 0°C.

(2) The second common cooling agent is water. In several respects, water is superior to air - its heat capacity is much greater; it is more easily moved and stored, the heat transfer is more efficient, and temperature fluctuations are much less. In the Icelandic context, there will be at least three sources of water, namely seawater, or fresh water of glacial origin, or finally, the glacier ice itself. Seawater has to be pumped up in large quantities anyway, for process purposes (3 million tons per year), and it may not cost a great deal more to pump twice or three times this quantity. The seawater temperature fluctuates from a low of -3°C or -4°C during winter to a summer maximum of about 12°C. These are extreme figures, and the actual fluctuation is likely to remain within a narrower range: nevertheless, the design has to provide for a

---

1/ Reference 124, for year 1964, page 103. Also see "Iceland Review" No.2 of 1964, page 7.

summertime maximum, and extra cold during the rest of the period will be of no practical benefit. The disadvantage of using seawater rather than air for cooling is that rugged heat exchangers are needed and much pumping energy to force the seawater through the heat exchangers.

(3) Iceland possesses several permanent glaciers, and each of them is the source of a glacial river. In summer, the water of these glacial rivers is at about 0°C near the source, and rises gradually with distance from the glacier. So far as the coastal glaciers are concerned (the seawater chemicals project is almost certainly limited to a coastal location) the rise in temperature of a glacial river is unlikely to exceed 5 or 6°C, even in the height of summer. The main disadvantage of using a glacial river as heat sink is the enormous fluctuation in volume of water. A glacial river can run strongly during summer, but in winter the principal source of the water - the glacier itself - melts very little, if at all, and the flow of the river would be considerably reduced. A short glacial river could even freeze up completely. Another disadvantage is the possible occurrences of destructive flash floods of large volume. A plant must therefore avoid the flood plain of rivers as much as possible, and the water of a glacial river, therefore, would not be so readily available.

(4) Iceland has several large glaciers, and at least three of them have snouts which approach very close to the coast. The biggest glacier of all, the Vatna Jokull, actually enters into the sea, while the next biggest, the Myrdals Jokull, has an outlet glacier, the Solheima Jokull, which reaches to within about 8 kilometres from the sea.

It is an attractive idea to use the glacial ice as heat sink. As shown elsewhere in this Report*/ for all practical purposes the availability of ice is unlimited. The temperature is always steady at about 0°C. The heat capacity of ice is about 80 times as much as that of water per degree centigrade. Although a glacier does move (at the rate of 1 to 2 metres per day) the movements are not anything like as dangerous as the flash floods of glacial rivers. The ice itself is a solid foundation for most purposes. All in all, we feel that the advantages of using glacial ice are so great that it certainly merits a careful examination of the potentialities.

---

*/ Chapter VI. (Page 55)

328. We shall consider only a completely automatic, self-contained, hermetically sealed, continuous refrigerating system, on the Platen-Munter principle, heated by geothermal steam and cooled by glacial ice. Such a system would involve the following units:

(1) Generator (heated by geothermal steam)
(2) Analyser (air-cooled)
(3) Rectifier (cooled by glacier water)
(4) Condenser (cooled by glacial ice)
(5) Liquid ammonia reservoir
(6) Evaporator (freezing out seawater)
(7) Absorber (cooled by heat exchanger)
(8) Gas heat exchangers
(9) Liquid heat exchangers

In domestic and commercial refrigerators, economy of space is the prime consideration, and it is essential that all the units be cramped together into the smallest possible space, even at the sacrofice of some thermodynamic efficiency. In Iceland, however, space is plentiful, and there is no call whatever for space economy at the expense of efficiency. It is suggested, therefore, that the nine units be kept separate from each other, and be made independently isolatable and accessible. If practicable, the units must be designed for open-air conditions, to economise on buildings. The designs will be such as to carry the full refrigeration load even in the height of summer. One might imagine that since the winter would produce cold anyway, the plant could be operated at a lighter load during cold seasons and spells. In the system suggested, this is not the actual situation. Under normal conditions, the heat of ammonia condensation would be absorbed by the rivers gushing from the glaciers (at 0°C) and by the ice of the glaciers themselves. Only a small part of the cooling is done by air, and even if this cooling is done by air, and even if this cooling effect is smaller (or bigger) it would not make much difference. Another point is that although summertime seawater may be at 8 to 12°C, whereas in wintertime the temperature may be 2 to 4°C, the saving in cold during winter may be only 4 to 10 calories per gramme, but it is negligible compared to the latent heat of freezing, which is about 80 calories per gramme. Hence, while the design must take maximum advantage of climatic conditions, there is no need to spend too much effort or invest too much capital on this item of expense.

329. (1) The design must obviously hinge around the figure of 3-1/2 million tons of refrigeration per year - roughly 10,000 tons per day. In the proposed design all this refrigeration must be carried by the ammonia, which takes this quantity of heat out of the seawater. Direct heat interchange between systemic

ice and incoming seawater is not practicable because ice is limited to a temperature of 0°C whereas seawater freezing requires -2°C.*/ In a later stage of the process the same heat is taken out of the ammonia by ice, and if the efficiency of transfer is between 65 and 70%, the total ice requirement may amount to 4.5 million tons. Since 3.5 million tons of ice will be forthcoming from the freezing of seawater (through ammonia as transfer refrigerant), it is only the remainder (1 million tons per year, or about 3500 tons per day) which has to come from the glaciers. If these quantities appear too large, it may be recalled that the Office of Saline Water has proposed plants freezing out 250,000 tons of ice per day, and that, too, by mechanical refrigeration, without benefit of the unlimited quantity of glacial ice available in Iceland. The Icelandic plant would be only a small fraction of the large plant proposed by the US Office of Saline Water.

(2) In the Platen-Munters system, the rate of refrigeration would depend upon the partial pressure of the hydrogen and the speed with which the ammonia-hydrogen (or ammonia-helium) mixture descends down the column from the evaporator to the absorber. This is dependent both on the density difference between plain hydrogen (or helium, as the case may be) and the ammonia-laden gas, as well as on the height of the columns over which the effect takes place and, of course, the diameter of the pipe. In the domestic refrigerator, this height rarely exceeds 3 or 4 feet, whereas in Iceland, a height of up to 3000-4000 feet can be provided, if necessary. Obviously, under such conditions the turnover of ammonia in the system could be much faster than in conventional commercial refrigeration. A complete change twice per hour is possible: hence, for 10,000 tons of ice refrigeration per day, a quantity of 100 tons of ammonia in the system would probably be sufficient. This is a substantial quantity of ammonia, but not unmanageably so. Heat exchangers must be highly efficient to effect this rate of heat transfer.

(3) The generator of this refrigeration system would be worked off geothermal steam and hot water, coming off at a fixed temperature, with very little fluctuations, either of temperature or rate. Likewise, the rectifier could be cooled by the water of glacial rivers, generally at a temperature of 0°C or close to it. The condenser would be cooled by ice. Such a system would have

---

*/ Paragraph 322

little variation in its operating conditions, and would need few controls. It could be left to itself for long periods with a minimum of attention. The plant would, of course, be custom-designed and custom-built. Much of the fabrication would be done on site, thus saving on transport of large vessels and prefabricated structures. It is therefore likely to cost less than a more conventional plant which has to use fuel for heating and cooling water of fluctuating temperature. The operating costs, also, would be quite low.

330. Size of Plant

(1) The foregoing analysis indicates the existence (in 1967) of an internal market for 50,000 tons per year of common salt, and all the other direct products of seawater equivalent to this quantity. It is also shown that sodium sulphate is several times as valuable as common salt, and can be manufactured from seawater, at the expense of its content of common salt and magnesium sulphate. The sodium sulphate has to find an export market. There is a large demand for sodium sulphate in the neighbouring countries of Iceland, viz: Norway, Sweden, Denmark, Holland, Germany and the Eastern European countries. Some of these countries also import large quantities of common salt, magnesia, potash, etc. - the potential direct products of seawater chemicals. In the third development stage, Iceland would probably be able to set up two large groups of industries, one, the manufacture of electro-chemicals (caustic soda, caustic potash, chlorine, hydrogen) and second-generation chemicals, using up large quantities of common salt; and two, the manufacture of pulp and paper, using imported logs and locally-produced chemicals.

(2) In view of the foregoing analysis of prospective demands, we feel that it is necessary to start off with some perspective planning, for eventually processing about 30 million tons of seawater per year, for a total output of one million tons of various chemical products. There is some latitude to choose the actual chemicals which shall be manufactured, and the decisions could be made in a medium-term development stage.

(3) So far as the immediate future is concerned, we envisage the creation of a facility handling about 3-1/2 million tons of seawater per year to produce about 80,000 tons of common salt, plus about 10,000 tons of sodium sulphate. There would be inbuilt capacity to double the intake of seawater and to manufacture about 30,000 to 40,000 tons of sodium sulphate, using imported gypsum as the source of supplementary sulphate radical.

(4) Thus, the very first stage of manufacture would be a kind of demonstration plant, with an intake of 3-1/2 million tons of seawater per year, which will all be subjected to freezing. The recuperation of the cold in the frozen products will suffice to freeze about 2-1/2 million tons of fresh seawater. The remaining 1 million tons freezing capacity per year is expected to come from geothermal steam, with glacial ice as heat sink.

IV. Iceland and its Conditions

331. (1) Iceland is the second largest island in Europe. Its northern tip lies within the Arctic Circle. It covers an area of 103,000 sq. km. (40,000 sq miles). The island is part of the North Atlantic Ridge, which extends eventually through the South American ocean to Antarctica, and which is a line of crustal instability in the earth. The island was created by eruptive action about 30 million years ago.[1] Icelandic rocks belong to two chief types -

Plateau basalts;
Palagonite basalts.

Each covers roughly half the country, the Palagonite belt dividing the plateau basalts down the centre from south-west to north. The plateau basalts were poured out of fissure volcanos, and normally are sheets about 15 to 100 feet (5 to 30 metres) thick, but in eastern Iceland the thickness of the plateau basalt reaches 20,000 feet (6,000 metres). In between layers of this basalt are to be found volcanic ashes, tephra, tuff, weathered rock, sandstones, shale and brown coal (lignite), formed during periods of dormant volcanic activity. The basalts are basic rocks, but are cut across by numerous intrusive dykes of acid rocks.

(2) The Palagonite formation is a zone of subsidence, and is a complex mixture of subglacial and subaerial eruptives as well as glacial, fluvial and aeolian deposits.

(3) During the last Ice Age, the whole of Iceland was covered with ice. The whole island sank under the weight of the superincumbent ice, and this allowed the sea to rise about 400 feet (120 metres) higher than it is at present, creating a peneplanation at this level.

(4) Iceland is the most volcanic country in the world, with about 200 postglacial volcanos. Since the Settlement of 874 AC there have been at least 150 recorded eruptions, from at least 30 volcanos. On the average an eruption occurs every five years. Generally, the eruptions produce more lava than ash. The biggest lava flow known in world history occurred in 1783 from Lakagigar. A single eruption of Mount Hekla in 1947 produced over 2000 million tons of lava.

1/ "Icelandic Review", 1967, Vol. 5, No. 2, page 37 (Reference 107)

(5) Iceland has the most number of hot springs of any country in the world. These springs are generally associated with dykes and fracture lines. About 800 springs have been registered, about 240 localities. The average temperature of the water is about 75°C. The biggest such spring has a flow of nearly 9 cusecs (cubic feet per second), equivalent to about 5 million US gallons per day. Some of the springs are geysers, spouting at intervals. The total output of the largest hot springs is about 30 million US gallons per day.

Fumaroles (steam and water at high temperature and pressure) are found in some fourteen areas. The total visible energy output of the known fumaroles is estimated at about 10 million kilowatts on a 35% use factor basis.[1/]

331. (1) The northern tip of Iceland is within the Arctic Circle and the northern coast of Iceland is washed by the North Polar Current from the Arctic Ocean. However, the south and west of Iceland are washed by the warm North Atlantic Drift (that is, the Gulf Stream), which also establishes a local circuit around the north and east of the island underneath the North Polar Current. Thus, Iceland enjoys a relatively equable climate, although on the cool side. Winters are relatively milder than the latitude would suggest, while summers are quite cool on the whole. The island enjoys abundant rainfall, ranging up to 200 inches (5,000 mm) per year, (average 120 inches - 3000 mm).

(2) The latest glaciation of Iceland began about 2,500 years ago and reached its peak about 1,000 years ago. Since then, the glaciers have been slowly retreating.* There are presently about 19 live glaciers, covering a total of about 5,000 square miles.# The biggest glacier called Vatnajokull covers an area of 3300 square miles and rises about 6,700 feet (2100 metres) into the air. It is the largest glacier in Europe and, in fact, contains more ice than all the rest of the glaciers in Europe put together.

(3) The volcanic two-thirds of Iceland is supposed to be a crust of one to three kms (3,000 to 10,000 feet) deep, resting upon volcanic magma, which has broken through the basement rock. This magma is believed to be the source of all the geothermal energy being produced in Iceland.[2/]

1/ Reference 100, page 65.

* The glaciers advance and retreat in shorter cycles as well

\# See Annex VI for details

2/ Reference 100, page 66.

(4) Iceland is a part of the North Atlantic Ridge, which extends several thousands of miles from North Pole to South Pole, and which is a zone of instability of the earth's crust. At intervals there are earthquakes and volcanic eruptions along this ridge. In 1963 a volcanic eruption threw up a new island about 15 miles off the coast of Iceland, which was named Surtsey. There have been about 150 major volcanic eruptions in the history of Iceland, and the effects of some of these eruptions have been felt as far off as Siberia.

(5) Iceland is today largely a treeless country. A few million timber trees have now been planted, but not all seem to grow well, because of insufficient sunshine, cool climate and strong winds.

332. (1) The Icelandic economy is heavily dependent upon fish, of which herring is the most important, followed by cod. Previous to World War II, the standard of living in Iceland was low, but during the War, fish earned very handsome prices and brought immense prosperity to this country. Furthermore, the Americans and the British attached great strategic value to Iceland. At one time there was an American expeditionary force of 150,000 stationed in the island, more than the entire national population of Iceland at the time.

(2) Presently, Iceland is a prosperous country, with a high average standard of living. On the other hand, it still remains precariously dependent upon the herring, and to a lesser extent on the cod, to maintain the high standard of living. Two factors threaten their standard of living:

(a) the herring shoals have now been driven far away from Iceland. Not only does it now require much more effort to catch the herring, but the shoals are fished by several countries with large international fishing fleets;

(b) The prices of several herring products have dropped catastrophically in recent months and threaten to drop still further. Recovery of prices cannot be predicted.

(3) As for employment, due to the high standard of living, there is a great demand for services of all kinds, and employment opportunities are many more than the population can fill. It is often difficult, therefore, even to maintain existing industries going, much less create new industries. One major industry which proposes to set itself up in the island has made it a condition that it

should be permitted to import labour for construction and erection, and this condition has been reluctantly accepted by the local labour unions, because local labour unions, because local labour is just not available. Similarly, there has been a flood of immigrants to man the fishing boats during the peak of the fishing season, and some of these immigrants settle down in the island permanently. A new industry will undoubtedly have to face the problem of labour shortage and may have to import labour. The cost of labour is high, approximating to levels in the USA or even more. In the fishing industry, productivity has risen with increases in wages, partly to progressive and bold thinking of Icelandic fishing directors. Naturally, the wages in other industries tend to keep pace with increases in the fishing industry, but it cannot be said that in the other industries there has been pro rata increase in productivity, although the Icelander is undoubtedly a strong, rugged, hardworking type, capable of high endurance, and ability to pick up technical skills very readily. He has developed a strong sense of responsibility and can be left to work without supervision.

333. (1) The salt requirements of the fishing industry, amounting at present to about 50,000 tons per year, are all imported from abroad, mainly from distant countries like Spain and Italy. The cost of the salt is of the order of US$1 million per annum. This drain has stimulated a series of investigations into the possibility of manufacturing the salt locally, and there have been at least three major investigations recently. On the whole, the prospects were regarded as unfavorable for a single product like common salt, which is extremely cheap, and readily procurable in large shipments from abroad. On the other hand, there is marked improvement in the economics of these proposals if the project includes recovery of other salts from seawater.

(2) There has been in recent years a kind of runaway inflation in the country's economy, and twice in the recent past the Icelandic krona (pl. kronur) has been devalued. Both devaluations provided only a temporary respite, and the shadows of devaluation once again loom dark over the Icelandic economy. As things stand, if there is no improvement in the future, it would appear that a further devaluation is in prospect*, and the only question is how much.

(3) Meanwhile, because of the relative instability of the country's currency, it would appear that the foreign investor is somewhat shy about bringing capital in. However, those who have been bold enough to do so are hopeful of good

*The expected devaluation took place in November 1967 by 20.3%, simultaneously with the devaluation of the British pound. However, the economic uncertainty remains.

results, and this may serve to allay the fears of foreign investors. The country is short of capital, even local capital, and any large-scale investment would have to be backed by financiers abroad. Iceland has excellent relations with many countries known for international investments, and a sound scheme would be certain to attract foreign investment interests.

334. The following quotation describes the current (1966) situation:

> "Economic growth has during the last few years to a large extent been based on the utilization of new techniques in a few sectors and on favourable natural and marketing conditions. Greater freedom of trade and enterprise as well as an improved balance of payments have facilitated the exploitation of available opportunities and more intensive competition both on the side of exports and the domestic market has exerted a pressure for improvements. On the other hand the growth has not, except to a very limited extent, been founded on general improvements of technique and organization throughout the economy and on a purposeful search of opportunities. As further prospects for growth in the conventional branches are now diminishing, it is of great importance that more varied initiatives are taken so that the economy can advance on a broader front. Those developments will in many ways have to be supported by the Government and public institutions. Their prerequisite will, however, be general economic stability and moderation of income increases so that the industries as well as the authorities can safely plan ahead."1/

1/ Reference 102, page 14.

V. The geothermal resources of Iceland*/

335. (1) The interior of the earth is intensely hot liquid magma, but it is only in certain very limited areas of the world that the hot magma approaches close enough to the earth's crust to become accessible as a source of energy, although, of course, not so close as to break out as an uncontrollable volcano. Iceland is one of the main sources of subterranean energy in the world. The subterranean heat is most valuable when the ground is porous enough to allow water to get to the magmatic layer in sufficient quantity and form steam. Lack of water to contact hot magma, or insufficient penetration may be limiting factors in some areas in conveying energy to the surface. Geothermal steam is of most value only when it is completely confined at depth by an inpervious layer, so that when the confining layer is pierced artificially under controlled conditions the steam comes rushing out under high pressure. If the confining layer is pervious, the steam escapes too diffusively to be confined or controlled. It is the latter type of phenomenon which makes for easy location of geothermal energy, but these easily-discovered large areas of steam escape are also the least valuable. On the other hand, if the confining layer is too impervious, it may not permit sufficient water to get through at all. The really important and valuable occurrences are those which are still confined deep in the ground, and have to be drilled for. In this respect, geothermal steam is much like natural gas or petroleum. Normally, fissuring of rock becomes less and less with depth, so that in the deeper areas there may not be sufficient percolation of water to raise steam, even if hot magma exists. In such areas, water sent down through drilled boreholes could return to the surface as high-pressure steam, with a high available energy content.

(2) Drilling for geothermal steam is more expensive than ordinary drilling, because steam is a more dangerous substance and special precautions must be taken to protect the drilling crews. The high temperature calls for

---

*/ The map and table referred to in this chapter will be issued at a later date.

special rigs and tools. Special drilling fluids are required that will not break down at the drilling temperatures. According to a fairly full analysis by Karlsson[1] it is estimated that in Iceland drilling a 9 inch hole costs on the average about $ 41 to 56 per metre, including casing.

(3) It will be appreciated that the areas of available geothermal energy are those in which the magma occurs close to the earth's surface, with the superincumbent soil porous enough to allow sufficient rainwater or seawater to seep through to the magma and form steam, but with an impervious confining layer as well. Such areas occur in many parts of Iceland, and over 700 places have already been located. However, of these 700 places, the valuable areas are only about one dozen. On theoretical grounds, the truly valuable areas are probably yet to be found, for the reason that if there are obvious steam emanations, it implies that the available energy (which, of course, is in limited quantity) may already have been dissipated over hundreds of years. The volcanic areas are also generally the areas of high ground, and these are the very places which bear glaciers. Therefore, all the important glaciers of Iceland are also the sites of volcanic activity and, ipsofacto, geothermal energy. The Myrdals Jokull (and its system of outlet glaciers) is no exception. In the middle of Myrdals Jokull is the fearsome volcano, Mount Katla, which has erupted eighteen times in history, with devastating violence, the last in 1918. It is due for an eruption at any time now. North of Mount Katla is one of the biggest sources of geothermal steam in Iceland. However, Mount Katla is closer to the southern perimeter of the glacier, and it is the sea side of Mýrdal jökull, therefore, that is most promising in respect of future geothermal energy. This happens also to be the best site for the establishment of the seawater chemicals industry. In this context, the following quotation will be of interest*

> "Heat reservoirs of hydrothermal systems of the composite type may be relatively large because their heat has been largely preserved by good natural insulation rather than be dissipated by

---

1/ Reference 95, Volume 3, page 215.

* Note, however, that the quotation refers to the USA.

convective discharge at the surface. The heat content of the Salton Sea geothermal area, as previously stated, is crudely estimated to be 2 x 10^{19} calories to a depth of 3 km. (or 10,000 feet), and the Lardarello system may be similar in magnitude. No sound basis exists for predicting how many large undiscovered systems of the composite type exist in the world, but 40 of the magnitude estimated for the Salton Sea area is not unreasonable. In addition, some hot spring systems of shallow circulation may be underlain at intermediate depth by rocks of low mass permeability, and these rocks in turn may be underlain by one or more circulation systems of the composite type".1/

336. There are two types of geothermal heat in Iceland, one in which the effusion is just hot water and the other in which steam is discharged under considerable pressure, and high temperature, ranging up to about 260°C (700 psia: 50 kg/sq. cm.). There is a continuous gradation from one extreme to the other. At least 700 springs of hot water are known, in over 240 localities. There are 14 known "thermal areas" (large areas of country) generating pressure steam,2/ and several other likely areas.

337. (1) The resources of four of the fourteen known thermal areas are equivalent to an estimated 200 million tons of oil.3/ This energy dribbles away, as the heat escapes into the atmosphere at present. The largest is Tórfajökull area in south Iceland. This single area extends over 100 sq. km., and releases heat equivalent to 2 million tons of oil per year.4/

1/ Reference 98, page 13.

2/ "ORKUMAL", May 1965, (not paginated)

3/ "Icelandic Review" 1967, Vol.2, p. 35.

4/ "Icelandic Review" 1963, Vol. 1, page

(2) Using 3 1/2 million tons of seawater per year to manufacture 10,000 tons of sodium sulphate and corresponding quantities of other salts, the thermal requirements are 1 million tons of glacial ice and, say, 1 1/2 million tons of steam. Assuming about 8400 working hours per year, there would be required on the average about 120 tons of ice and 180 tons of steam per hour. These figures are quite practicable. The town of Reykjavik alone is supplied with ten times this quantity of hot water and steam, mainly for space heating. A single field at Torfajökull can yield 3,000 tons of steam per hour. Experts estimate the yield of high temperature areas in Iceland at 5-50 gigacalories* per square kilometer per hour, equivalent to 100,000 to one million tons of steam per year per square kilometer. There are hundreds of square kilometers of such areas already known in Iceland and many more under glaciers, not yet definitely located. Hence, there is no reason to fear that there would be any shortage of geothermal heat, even in the expansion stage, when ten times as much steam will be required.

338. That such energy can be captured and put to industrial uses is now clearly established. In Italy over 400,000 kw of power are being generated from geothermal steam one station, and in New Zealand 300,000 kw.[1] In California there is only a small unit of 56,000 kw [2] but much bigger units are planned - the capacity of this area alone is estimated at 1 million kilowatts[3].

339. The following material is reproduced from Waring's treatise on "Thermal springs of the USA and other countries of the world"[4] by kind permission of the Director of the Geological Survey of the USA.

---

* giga - thousand million (see conversion table in front)

1/ Reference 93, Vol. 3, page 274.

2/ Reference 96, Press Release dated 29 March 1967

3/ Ibid Press Release of 11 May 1967

4/ Reference 97, page 99 et seq.

VI. The Glaciers of Iceland

340. (1) Icelandic glaciers can be used as a source of energy. Normally, devices to use steam for power would have to work on a waste heat discharge of about 15°C or 20°C, because such ambient temperatures are reached during summers. The availability of ice, however, permits power in steam to be used all the way down to 0°C throughout the year. Because of high latent heat of fusion, ice has a large heat capacity for absorbing waste heat.

(2) The glaciers of Iceland began to grow really big only about 2500 years ago[1] and reached their maximum size in the 18th century AC[2]. Thereafter they began to lose mass, and some have disappeared outright. Careful measurements have been taken by several expeditions, Icelandic, Swedish, French, Swiss, British, Danish, etc. and it has now been clearly established that in the past 40 years the glaciers have been steadily wasting away[3]. The quantity of the ice in the big glaciers, however, will take several hundreds of years to melt.

(3) A glacier grows by accretion of snow which becomes infused by rainwater or superficial thaw water, which upon freezing turns into ice. In some parts of Iceland the rainfall is over 200 inches per year[4], and a glacier could theoretically gain this height in a year. However, ice is plastic, and exhibits rheological behaviour - flow under steady pressure. The weight of the superincumbent ice causes ice to be squeezed out at the foot on the outlying boundaries, and the height gained in one winter could thereby be lost before the snows of the next winter.

(4) Thus, tongues of ice fill up and flow down the valleys on the fringes of the glaciers. These are called outlet glaciers. The forward end of an outlet glacier (called its snout) moves forward during a winter: it retreats during the next summer, because melting exceeds forward movement. The speed of ice movement in July was found by the Durham University Expedition of 1948 to be 18-24 metres in 14 days[5]. The average recession was 26 metres per year. During the past

---

1/ Reference 101 page

2/ Thorarinsson, "Jokull", August 1966, page 209

3/ McDonald, reference 109, page 20

4/ Reference 120, page

5/ Reference 112, page 8

40 or 50 years, the net result has been a retreat of glacial snouts by several miles, and in fact, several glaciers have completely lost their identity, only residual icecaps remaining to indicate where a glacier has existed in former times.

(5) Iceland has today eighteen permanent glaciers. One of them, the Vatnajökull, has a surface spread of 3300 square miles, and stands over 2100 metres high at the peak, with the base reaching down in places to about 160 metres below sealevel. This glacier alone would contain over 5 million million tons, making it the largest single block of ice in Europe, and containing as much ice as all other European glaciers combined. The total availability of ice in the glaciers of Iceland is certainly over 10 million million tons - see Annex VI for a full list of glaciers. This is more or less the permanent stock. In addition, the annual average snowfall over Iceland is equivalent to 40,000 million tons, but, of course, if this is not used up in some way, it would melt away in the next summer, and hence cannot be said to be available throughout the year.

341. (1) One factor which has to be reckoned with is the subglacial outbursts of water (jokullhlaup). Underneath all the big glaciers there are probably active volcanos, or at least thermal areas. The heat rising from the earth melts the base of the glacier and builds up buoyancy pressure. When the pressure becomes high enough (generally coincident with eruptions) the superincumbent ice (which may be thousands of metres thick) is lifted up, and a huge wave of water comes out in a torrent, with catastrophic violence, and causes immense destruction. At least some of the structures of the sodium sulphate project may have to be sited on the flood plain of a jokullhlaup. In order to prevent pressure build-ups of this type, enquiries were made of the renowned glaciologist, Mr. Jon Eythórsson whether, if a tunnel were out through the glacier at its base deep into the interior, it might provide a sort of relief valve and allow water to flow out continuously, instead of in cataclysmic bursts. Mr. Eythórsson agreed that this was theoretically possible. Such a tunnel could be bored, (though suitable precautions would be necessary), but, since ice is plastic, the tunnel would have to be always extended inwards[1]. The difficulties of boring a tunnel into a glacier and maintaining the opening should neither be under-estimated nor regarded as insuperable.

1/ A natural tunnel is mentioned by McDonald in Reference 109, page 20

(2) The question of crevassing was also discussed. According to Mr. Eythórsson, in the main glacier crevasses could not be very deep, because at depth the ice would be under high pressure, and crevasses would tend to close up. Towards the snout, however, extensive transverse crevassing occurs, from one side of the valley to the other, and some of these crevasses may reach nearly to the base of the ice mass.

(3) A glacier is not one homogenous block of ice, but a mixture of ice, snow, water, volcanic ashes, rocks and other masses. The water can occur in large quantities. The temperature of the mass is nearly the same all the way through.

VII. Electrical Resources of Iceland

342. The project would require large quantities of materials to be moved and handled; hence, a substantial amount of power would be needed. It has been estimated[1] that the total technically harnessable water power in Iceland is 35 terawatthours* (35 thousand million kilowatthours) per year or about 10 million kilowatts plant capacity at 35% load factor. Nearly 98% of the total potential remains to be harnessed, but some potentialities are uneconomic. Some of the generated power at present costs, apparently, about 1.5 mils# per kWh, which would make it about the cheapest commercially available power in the world. The tariff on which the Ammonium Nitrate Fertiliser Corporation is functioning provides for a charge of 0.77 mils per kWh for off-peakload power, while the aluminium smelting plant which is coming up has been promised baseload power at 2.5 mils per kWh. The sodium sulphate project, being a pioneer venture, which would have to face exceptional difficulties, would also have claim to cheap electricity. Although electrical power is not one of the substantial cost elements involved, it is reassuring to know that plenty of electric current would be available at reasonable rates, of the order of 2.5 mils per kWh.

343. In 1964, the installed capacity and generation of electricity were as follows:

	Capacity kW.	Generation kWh.
Hydro plants	123,000	653,000,000
Thermal	26,000	13,000,000

These are plants in the public sector. There were four plants in the private sector, which generated an estimated 15 million kWh of electrical power per year[2], excluding the many small captive plants in Iceland.

344. The Government of Iceland has been following a policy of bringing electricity into the home of every Icelander at reasonable cost. In pursuance of this policy, by 1964 over 97% of the population had been provided with access to electricity[3].

---

* tera = million million (see conversion table in Annex XII)

\# mil = one-thousandth US dollar

1/ Reference 116, May 1965, item 3

2/ "Orkumal", May 1965, item 3

3/ Reference 101, page 190

There has now been established a complete national electrical grid over the entire island. A few small local grids have not yet been linked to the national grid, but generally industry has access to electricity, wherever it may be situated.

345. If high-pressure steam is discovered at one of the three possible sites for the chemicals project, there would be good opportunity to use the steam to generate power, and feed surpluses into the national grid as a baseload source. This could well be an additional source of revenue for the chemicals plant.

VIII. Miscellaneous factors

347. Transport

(1) One problem which will surely arise is ocean transport. Much of the island's coast is deeply incised, and fjords often are deeply cut by glacial action: hence deepwater port facilities can be created comparatively easily. However, where large glacial rivers open into the sea, deposits of soil and sand over the ages have covered the indentations with heavy sand deposits: hence natural harbours are non-existant in these areas. Artificial harbours are difficult to construct, because of very rough seas, and strong along-shore sand drifts. The problem is especially acute in the area which is otherwise most favourable for the establishment of this industry. No quick or easy solution is in sight, but since there are harbours within short distances*, it is fairly certain that some means can be devised for placing the products on board ship at economic costs. Details are discussed in the chapter dealing with location of plant.

(2) As for land transport, there are no railways in Iceland. There is a road system, but the surfacing leaves much to be desired, even within towns. In the countryside the roads are simply dirt-tracks, sometimes covered with cinders. These roads inflict fearful punishment on vehicles, and must be contributing heavily to the high cost of road transport in Iceland. It is not a situation which can be corrected readily or quickly: hence must be accepted for what it is.

(3) By contrast, air travel is quick, comfortable and convenient. There is one international airport and twenty-one other airports capable of accepting large planes. For a population of 200,000 to have 22 airports may appear to be somewhat ostentatious, but in fact it is only the existence of these airports which permits the easy movement of the population which has developed rapidly in recent years.

348. Personnel

(1) Iceland is a country whose population is small (200,000), but of high quality. The entire population is literate, and an unusually large proportion is educated, in the real sense of the term. The people already possess most of the professional skills imparted through Universities and polytechnics, and arrangements are being made for those skills which are still lacking. What more

---

* For example, at Vestmannalyr

is needed for the purposes of this project can be readily imported. Icelanders have a long tradition of studying abroad. Thus it is reasonably certain that the personnel needed to man this project could be recruited from among Icelandic nationals.

(2) On the other hand, labour in Iceland is scarce and costly. Current wage levels are on a par with rates prevailing in the USA, and even then it is proving difficult to find labour for the more tiresome or obnoxious or menial tasks. The three practicable sites are all in remote, desolate and relatively unpopulated areas, into which is would be difficult to attract workers. It is therefore necessary to mechanise and automate the processes as much as possible, to reduce the number of workers, while paying them attractive emoluments. Fortunately, the nature of the processing lends itself admirably to this kind of design.

(3) Personnel costs have been taken on the same basis as in the U.S.A.

IX. The Marketing of the Chemical Products

349. Common Salt

(1) There is an immediate demand within Iceland for about 50,000 tons per year of common salt, mainly for fish preservation. For this purpose, the salt has to be fairly coarse-grained, and should be free of certain deleterious ingredients, like copper and manganese ions. This demand may rise considerably in the near future, depending on the demand for fish abroad, the catches handled in Iceland, the extent of processing within the country, and similar factors. Presently the salt is imported from various countries of the world, chiefly those in the Mediterranean region. The landed cost is about $15 per ton, and the total cost of imports is nearly $1 million.

(2) It so happens that in the scheme recommended by us there will be a production of about 60,000 tons of common salt. Thus, this entire quantity can be absorbed locally at acceptable levels of profit to the manufacturer as well as reasonable prices to purchasers. However, the first stage is only a preliminary stage, and is likely to be followed by an expansion stage, in which the sodium sulphate production will be ten times bigger. That may result in the production of 300,000 tons of common salt.

(3) There is very little demand elasticity for common salt in any country, and however much the price is dropped, the local demand for the salt is unlikely to increase at all. On the other hand, the economics will not permit of the salt being thrown away. There are two ways of dealing with this situation. One is to export the salt, and the other is to use up the salt locally in chemical industries.

(4) There is a lucrative market for common salt in neighbouring countries. Some figures are as follows[1/]:

1/ "UK Statistical Summary of the Mineral Industry", 1965, page

	Year	Imports Tons	Exports
Belgium	1962	585,304	648
Denmark	1963	167,786	235
Faroes	1963	33,292	-
Finland	1962	270,100	-
France	1962	76,521	135,101
Germany (west)	1963	55,520	876,238
Netherlands	1963	61,838	849,511
Norway	1963	162,412	5,932
Sweden	1963	618,295	1,225
U.K.	1963	170,399	362,866

It will be seen that the countries of Western Europe imported about 1.8 million tons and exported 2.1 million tons. The region as a whole is a net exporter: nevertheless, with gross imports of 1.8 million tons per year, it should not be too difficult for Iceland to squeeze out a small market for itself. It is to be noted that Norway, Sweden and Denmark (including the Faroes) between them have net imports of about one million tons. These are countries with which Iceland has some special relationships, so it may be possible to enter into bilateral trade agreements for the disposal of substantial quantities of salt, provided transport difficulties can be overcome.

350. (1) However, we also foresee a substantial demand for common salt within Iceland for processing purposes. One line would undoubtedly be the interchange between common salt and calcium sulphate (gypsum or anhydrite) to manufacture sodium sulphate - a sub-process which has already been mentioned in this Report*. Such a manufacturing process is capable of absorbing up to half the surplus salt - maybe even more. It is therefore of importance to have this sub-process carefully and completely investigated.

(2) The other major outlet for the salt is to use it in the manufacture of soda, making use of the enormous potential which exists in Iceland for cheap electricity. Both soda ash as well as caustic soda can be manufactured, the former by the ammonia-soda process and the latter by electrolysis. The fact

* See paragraph 323 ante

that ammonia is being manufactured in Iceland would be a factor (although not a very important one) in its favour. In the electrolysis of salt to caustic soda, large quantities of chlorine would be generated. There are huge markets for chlorine in the USA, UK, USSR, Germany, France, etc. The USA alone manufactures nearly 8 million tons of chlorine, and the demand is still rising rapidly. In Iceland the manufacture of the co-products, chlorine and caustic would be simply a way of marrying surplus common salt to cheap electricity to produce goods for export. Bulk transport of chlorine is highly specialised, and the expertise is available in several countries.

(3) One more major outlet for common salt is to electrolyse the molten salt to manufacture sodium metal and chlorine. The metal sodium is rapidly growing in stature and is becoming a basic chemical, to be used in bulk quantities. It has been found to be a very efficient conductor of electricity, and for equal performance is less than half the cost of copper - for the same volume it costs one-fifth as much as copper. It is now beginning to be used in heavy-duty electric cables where the hazards associated with the use of sodium can be kept under strict control. There is also a distinct trend for manufacturers of titanium to switch from the Kroll process (using magnesium as reducing agent) to sodium, and this could absorb large quantities of sodium metal in the near future.

351. There is, therefore, a fair degree of confidence that there will be a large market for Icelandic salt, internal as well as external. However, the mere existence of a demand, though necessary, is not sufficient to establish a market. The supplier has to satisfy the customer on quality, quantity, prices, delivery dates, and many other points before a market can be said to be established. Long-term contracts are essential, because a small country cannot have the financial resources of the large and powerful industrialised nations. Therefore, it becomes of great importance to negotiate for long-term buying contracts with various bulk users of these products.

352. <u>Sodium sulphate</u>

(1) This is the salt on which the whole project was first based. There is no demand for it within Iceland itself, nor is there likely to be any large indigenous demand for quite some years to come.

(2) World demand for sodium sulphate is of the order of 2 million tons per annum. The USA alone produces over one million tons, but still has to import about 10% of its requirements. The biggest users of sodium sulphate are the kraft paper pulp manufacturers, most of whom are to be found in Finland, Sweden, Norway, Canada, USA and, of course, the East European countries. Iceland is at the centre of gravity of these countries, and has friendly relationships with them. There would appear to be good prospects of Iceland being able to market easily any quantity it is likely to produce. The first stage of production will result in only 10,000 tons of sodium sulphate per annum, and this alone may take 2 or 3 years to come into full operation. An additional process step may increase the output to 25,000 or 30,000 tons per annum, and a large expansion may carry the output to 400,000 tons per annum. By that time the world demand for sodium sulphate is likely to exceed 5 million. So there is not likely to be too much difficulty in exporting Iceland's sodium sulphate.

(3) It may be mentioned at this stage that the advantages of very cheap electricity, large and steady supplies of steam and water, and potential harbour sites are factors conducive to the establishment of a paper pulp industry, catering to an export market. It has been remarked above that Iceland is a treeless region, but this need not be an insuperable obstacle. There are huge forests of conifers in the northern reaches of Europe and Asia, and it may not cost much more to raft logs to Iceland than to move the logs internally within the country in which they are grown and produced. If it is possible to make long-term arrangements with, say, Norway, Sweden, Finland, USSR or Canada for supply of pulpwood, (perhaps against reciprocal supply of sodium sulphate, salt, soda, chlorine, etc.) there would be an internal demand for a substantial amount of sodium sulphate, caustic soda, chlorine, etc. We do not envisage such a demand to arise in the near future, and at best it can only be a second-generation industry, dependent on the local manufacture of chemicals. Nevertheless, the discussions we had in Iceland on this theme were sufficiently promising for us to go on record with the suggestion. If it is decided to go ahead with the manufacture of sodium sulphate, it would be plain business prudence to start also to work on the idea of setting up a paper pulp industry in Iceland.

353. Potash

The manufacture of 10,000 tons of sodium sulphate from seawater will result in the co-production of about 2,000 tons of potash. It has already been established by Ludviksson and Lindal[1/] that there is a demand for potassic fertilisers within Iceland amounting to 8,000 tons potassium chloride and 2500 tons potassium sulphate per year: hence, no marketing difficulty is expected to arise. Even in the final expanded stage of production, with about 400,000 tons of sodium sulphate and 400,000 tons of common salt, the production of potash salts from this project will be barely 20,000 tons. This quantity is likely to be less than the agricultural and industrial demands of Iceland by that time. Industrial uses could absorb thousands of tons per annum as for instance, the manufacture of potassium chlorate.

354. Bromine

This is a chemical which is rapidly growing in importance, and several new manufactories are springing up around the world. It is a high-priced chemical, rating about $800 per metric ton, whereas in Iceland it will be practically a waste product, which could be sold for any price it would fetch. No serious marketing problem is anticipated in disposing of the 100-150 tons per year which will be produced in the first stage.

355. Magnesium salts

One of the major uses for magnesium salts is the manufacture of refractories. When magnesium chloride is steamed, it decomposes to magnesium oxide (or hydroxide) and hydrochloric acid. The magnesium oxide, mixed with a little iron oxide, and calcined at high temperatures, makes a refractory which is of great value in industry. The one cement factory of Iceland itself can absorb a certain quantity of this refractory, and other industries also need such high-quality refractories.

(2) Iceland also has a sizable demand for thermal insulation, especially for hotwater and steam pipe lagging. Lightly calcined magnesium oxide is one of the world's best insulators.

1/ Reference 113, page A31 .....

(3) Lightly calcined magnesium oxide (called "caustic magnesia") can react with magnesium chloride to yield magnesium oxychloride cement, one of the strongest and most attractive cements known. Iceland has no indigenous high-class plastering material - not even plaster of paris - and oxychloride cement might get into great demand for highclass interior work, warm flooring and the like. The demand for such a cement has not been evaluated: however, since the total production of magnesium chloride in the project's first stage is going to be no more than about 15,000 tons, and as this could be used for three bulk purposes locally (refractory, insulator, cement), little difficulty is anticipated in disposing of the magnesium chloride.

(4) A problem might be the disposal of the hydrochloric acid resulting from the magnesium chloride processing. Large demands within Iceland are unlikely: hence it would have to be used up in processing or exported. Both possibilities exist. Thus, for instance, Iceland has deposits of ilmenite, which could be used to manufacture titanium dioxide by the chloride process, which is rapidly supplanting the sulphate process in the world. The hydrochloric acid could be electrolysed to chlorine - also a process which is fast becoming standard. As for export, hydrochloric acid is getting into big demand for pickling steel. Icelandic hydrochloric acid would command good prices in Sweden, UK, Belgium, Germany, France, and other countries of Western Europe for steel pickling.

356. The foregoing presents a qualitative picture of the market situation. No attempt was made to study the markets in quantitative depth. For one thing, there simply wasn't sufficient time to undertake the job. Secondly, the statistical data were very scanty. Thirdly, a further study in depth was contemplated, so this job could be reserved for that stage. All the indications are that there are excellent, easy and profitable markets for Iceland to tap. As for prices, some indications are given in the chapter on economics.*

* See paragraph 365 post

X. Process technology

357. Suggested Working Details

(1) Seawater is pumped up (from brine galleries ashore at a depth of, say, 20 to 50 metres below the surface), and elevated into an above-ground or submerged storage tank (capacity 10,000 m^3, or about 3 million US gallons), with sufficient height to allow the seawater to gravitate through the whole process. The tank could well be located on elevated ground close to the processing works, and in such case could be an earthen embankment on flat ground or a depression. It could as well be a plastic bag of sufficient size, kept submerged in a glacial pond or lake. It should be self-scouring. Somewhere on route after leaving storage, the seawater will pass through a heat exchange cooled by the river leaving the foot of the glacier, and finally cooled by ice from the process itself.

This seawater, now substantially at 0°C (32°F) is subjected to freezing in two or three stages. In the first stage, the seawater temperature is reduced to the temperature of incipient freezing, which is -2.3°C (28°F). In the second freezing stage, down to -8.2°C (17°F), ice is manufactured and separated. In the third stage, from -8.2 to -13°C (17 to 9°F), sodium sulphate forms, and is continuously removed. The cold values locked up in the ice and chilled brine are recovered in heat exchangers, supplemented by glacial ice (through a secondary refrigerant).

(3) There will be inbuilt provision for dissolving gypsum in the seawater at the stage of -8°C (or a little earlier) to increase the output of sodium sulphate by at least 100%, possibly 200%. This innovation could be introduced after some time.*

(4) In order to simplify matters, it is assumed that half the costs are borne by the sodium sulphate (10,000 tpa), and half by the other salts (90,000 tpa). This division of cost is based upon estimated values, and can be adjusted after re-calculation.

(5) The refrigeration system is the heart of the whole project. It is described separately#. The subsidiary refrigerator will be located near the glacier and will manufacture a secondary refrigerant, which will be added to

* See paragraph 330 ante

\# See paragraph 325 ante

the main stock. The freezing plant will be fed from a reservoir of liquid ammonia, and will have a refrigerating capacity of roughly 10,000 tons per day. For the regeneration of the refrigerant there will be two units. One unit will be integral with the seawater freezing unit, and will regenerate roughly 7000 tons freezing capacity. About 300 tons of freezing capacity ammonia gas will be sent to a separate unit to be regenerated with glacial ice. Both units will feed cold liquid ammonia into a reservoir held at the coldest water level reached in the system.

(6) The solid sodium sulphate is elevated out of the freezer and drained. It can be dehydrated by gentle heat very easily. If dehydrated, it will lose nearly 60% weight. It has to be considered whether the cost of dehydration is justified on account of savings in handling and freight. Some buyers would prefer the hydrated crystals rather than anhydrous powder. There are several forms in which sodium sulphate is bought and sold.

(7) The residue of the seawater freezing is a brine which is saturated in respect of sodium chloride. This brine is sent to the grainer house, where it is boiled down in grainer pans with geothermal steam. The residues of this plant are further treated to recover potash, magnesia, bromine, and other products. This part of the processing is quite conventional: hence, needs no detailed description herein.

358. <u>The main heat exchange situation</u>

(1) The seawater entering the system comprises salts dissolved in water. The products leaving the system are the same salts and the same water, but separated from each other. The temperatures of the entering and exiting materials are of no consequence, and could well be the same. Theoretically there is very little difference in energy content between the two states before and after. However, in working practice energy potentials have to be established and maintained, and there are always leakages and wastages involved, for which there is no ready means of calculation. Accordingly, we have started with the assumption that some 30 to 35% of the heat transfers will be lost, and will have to be made good in some way.

(2) In a plant processing 3.5 million tons of seawater in 340 to 350 working days per year, there will be an intake of approximately 10,000 tons of seawater per day. When this seawater is exposed to freezing conditions, some 8800 tons of ice will form, and 1200 tons of chilled brine will pass to the next stage, where about 70 tons of sodium sulphate crystals (containing about 30 tons of sodium

sulphate) will form and be separated. The remaining brine will then be passed to the steam evaporation plant. The quantity of cold in the brine (at -13°C) is equivalent to about 200 tons of ice. Added to the 8800 tons of ice resulting from the first stage, the total availability of ice equivalent in this area would be roughly 9000 tons. The cold in this 9000 tons of ice is to be retransferred to the incoming seawater. This cannot be effected by simple heat exchange because ice itself remains at 0°C while melting, while seawater temperatures go down to -8°C while ice freezes out (also at -8°C). A multistage heat transfer device, using high pressure in small increments is theoretically possible,[1/] and would be the analogue of the multi-stage flash evaporator for boiling. Another possible device is to apply continuous vacuum on the incoming seawater by a vacuum pump, and compress the vapour into the coolant ice. The compressor would then merely function as a heat pump. However, the first device is not yet in commercial production, while the heat pump has no special advantages over the use of a secondary refrigerant. Accordingly, the best device under these circumstances would appear to be the use of a secondary refrigerant between the ice coming out of the system, and the incoming seawater. For the reasons already stated*, it is proposed to limit consideration to ammonia as the medium.

(3) The question arises whether the ammonia should be applied in heat exchange directly to the incoming seawater or whether it should be used first to make another refrigerant, which can then be applied against the seawater. On balance of advantages, it appeared that the indirect method was superior. Closer examination may indicate otherwise, but for the time being we shall assume that the cold liquid ammonia is evaporated directly against incoming butane in two or more stages, and that the butane is applied into the seawater.

(4) Basically, then, this section of the plant will accept seawater at 0°C and subject it to freezing in two or three stages, against ammonia as refrigerant, which in turn will work between steam at about 100 or 120°C and ice (from the system) with butane as transfer refrigerant.

1/ Reference 83A (1966 Report, page 110) contains some information

* See paragraph 325 ante

359. OUTLINES OF PLANT DESIGN

(1) In the application of the design considerations mentioned in this Report to the actual conditions prevailing in Iceland, the author is limited by the fact that his entire acquaintance with Iceland is a flying visit of less than two weeks: hence, the conlusions and recommendations are subject to verification and check.

(2) We were invited to submit definite proposals on which a specific pre-feasibility investment report could be commissioned. This we were reluctant to do, for the reason that our acquaintanceship with Iceland might be regarded as inadequate. Our draft Report, however, elicited a series of questions, and in replying to this questionnaire it was found necessary to establish some basic concepts about the plant to be set up. We felt that it may serve some purpose if we were to set out these concepts, on the understanding that they are just ideas, pointing to only one of several possible solutions of the problem.

(3) There are three units in the whole plant:

(1) seawater processing;

(2) boiling of ammonia solution by geothermal steam;

(3) condensing of ammonia gas by glacier ice.

These three units have to be interlinked by pipes, carrying respectively seawater, steam under high pressure, and ammonia gas under high pressure. The seawater is the easiest and cheapest to transport: next comes the steam, while ammonia is the most difficult and expensive. On the other hand, seawater is the largest quantity to be moved, and is at the lowest energy level: hence any movement of the seawater will call for expenditure of effort. Steam can move under its own internal energy. With ammonia, the movement takes place with least effort. Upon a balance of considerations, we feel that the eventual design will embody an ammonia gas pipeline of least length, followed by the same consideration for the steam pipeline. The seawater will have to be brought to the processing location determined by the two other factors.

(4) The quantities of ice involved are important. The first commercial-sized plant is expected to consume one million tons of glacial ice per year - say, roughly one million cubic metres. This quantity of ice will be melted every year. But it does not follow that the melting will create a cavity of this volume. Winter cold will have a two-fold effect. Firstly, it could

be utilised to reduce the demand for glacial ice. Secondly, it could be used to regenerate a part of the melted ice. It is also necessary to take into account the rheological properties of ice - its characteristic of plastic flow under pressure. Due to this property, a large cavity would tend to close up at depth. For all these reasons, the likelihood is that an actual cavity in the ice would not exceed a certain volume. We have no basis at all to estimate what this volume is likely to be: nevertheless, some figure is needed, to simplify the derivations. Therefore, it is assumed that when hot ammonia gas is cooled by glacial ice at depth, the cavity which forms will stabilise itself at a volume of 500,000 cubic metres and remain at this volume indefinitely, despite the melting of 1 million cubic metres per year. The expansion of this plant to ten times the original may result in a cavity only three times as large because of the high surface/volume ratio.

(5) We have been requested to indicate means of overcoming the great difficulties of using glacial ice <u>in situ</u> as a coolant. This is a matter of design, details of which cannot be treated here. There are several possibilities. For instance, the heat exchanger tubes can be mounted on a chain of pontoons floating in a pool on the top of the glacier. Thereby the movements of the glacier will not affect the position of the heat exchanger. The pontoons will naturally be anchored to hard ground on the banks of the glacier. There would be a flexible connexion from anchor points to pontoons, and these connexions will bring in the gaseous ammonia and take out the liquid. Further details will be left to the design engineering stage.

(6) So far as concerns the refrigeration cycle, there will be an internal pressure of about 15 to 20 atmospheres, partly due to ammonia vapour and partly to hydrogen. In the cycle are also involved liquid ammonia, water and ammoniacal watery solutions of various strengths. The whole assemblage has to be hermetically sealed, with not even the trace of any leaks. The piping will be of various diameters, the smallest carrying liquid ammonia from reservoir to evaporator, and the largest pipe carrying hot ammonia vapour from the generator to the condenser. It is important to keep all piping as short as possible, to avoid capital expense, and reduce leakages of both materials and heat.

(7) The entire plant will comprise the following:

(a) Seawater induction, preliminary treatment, conveyance to factory site and storage;

(b) Freezing of seawater and separation of sodium sulphate, with heat exchangers to recuperate as much heat as possible;

(c) Boiling of remaining brine to manufacture various other salts;

(d) Refrigerator plant, itself comprising nine elements; *

(e) Steam bore-hole, control and transmission.

Of these major units, the induction of seawater and its preliminary processing necessarily has to be done where the brine is most readily available. (Generally this will be somewhere on the seacoast, but an inland site cannot be excluded. The Lindal proposals are, in fact, based upon such a brine, and some of the springs mentioned in the US Geological Survey publication# mentions a few other saline springs.) The steam procurement and control gear have to be situated where the steam is most easily and economically procurable. The rest of the plant can be situated anywhere within a fairly large area.

(8) Our tentative suggestion is that all these other units be mounted on a series of pontoons and kept floating or submerged in a small pond or lake atop the selected glacier, a few hectares in superficial extent and about fifty metres deep. The dissipation of heat from the ammonia vapour will take place against the face of the glacier, while the other plant units will be dispersed wherever they fit in best. The ammonia reservoir could well be totally submerged, so that it is always at zero degrees centigrade. Storage of seawater could also be effected in a plastic bag kept submerged in the lake, and holding one day's supply. There will be a tendency for the lake to become enlarged because of the melting of one million tons of ice per year (later to be increased to ten million tons per year). If the location is correctly situated, there will be a construction of the glacier valley ahead of the plant, and this will tend to close up the cavity, thus concentrating the tendency to enlarge the lake. Even if this effect is not there, the additional water can be siphoned away, so that the lake will remain stabilised in size and position, subject only to annual movement caused by the climatological effects of the changes of the seasons. All the plant units will be interlinked, and each will be separately anchored to firm ground on the sides of the valley.

---

* See paragraph 328 ante.

\# See paragraph 339 ante.

(9) A few years ago such a design might have been rejected as being impractical and lacking in experience. However, the petroleum industry has fully evolved the technology of offshore drilling rigs, both floating as well as submerged or piled, and all the major difficulties of working on floating platforms can now be said to have been mastered. Even ice formation and movement have had to be foreseen, as in the North Sea and Baltic Sea drilling rigs, not to speak of the drillings being done in the permafrost areas of Northern Canada. Iceland itself has plenty of experience of floating factories in its herring and whaling factory ships. Therefore we do not anticipate any opposition on grounds of basic principle. That there will be opposition and criticism on matters of detail is only to be expected, and such reactions are always welcome as indicating the areas of design weakness before any irrecoverable step is taken.

(10) A locational diagram based on these theoretical principles is given in Annex VII E and F. It is purely conceptual and schematic - detail will need considerable data from the field and the work site on top of the glacier, where the refrigeration is to take place. This is a suitable situation for the establishment of a Platen-Munters cycle of absorption refrigeration, in which hydrogen gas is used to lower the partial pressure fraction of the evaporating liquid ammonia and convey the vapour to the absorber water. The rate of movement of the gases depends on the relative densities of hydrogen by itself, opposed to a hydrogen/ammonia mixture, and the vertical heights over which the density difference operates. In a domestic refrigerator the height difference is less than 2 metres, whereas in the proposed Icelandic system the difference could be as much as 900 metres or even more. Therefore it can be anticipated that a high gas velocity will be established and maintained - of the order of 12-15 metres per second.

(11) The static pressure throughout the ammonia-hydrogen system will be maintained at about 20 kg/cm^2 absolute. At an evaporation temperature of, say, $-20^{\circ}C$, the vapour pressure of the ammonia will be roughly 1 kg/cm^2 absolute. The difference of 19 kg/cm^2 will be taken up by the hydrogen. Kinetic pressures will be different in different parts of the system, and the actual figures to be established are for the design engineers.

(12) With about 3000 tons of refrigeration per day needed from the glacier and latent heat of vaporisation of ammonia approximately four times the latent heat of freezing of ice, the movement of ammonia between glacier and freezer would be, say, 800 tons per day (allowing for some heat loss on route), or roughly 10 kg of ammonia per second At pressure of 20 kg/cm^2 absolute this means movement of about 600 litres per second (in round figures) At vapour speed of 12 metres per second, a pipeline about 25 cm. diameter will be able to carry the load. Because of uncertainties in the basic data, all these figures are only approximate, though fairly reliable. It may be that a pipeline 20 cm. would suffice, or it may be necessary to provide 30 cm. but this range would probably cover all the possibilities.

(13) A pipeline carrying ammonia at 20 kgs/cm^2 has to be fabricated carefully to avoid leaks. The suggested design will minimise the length of this pipe - indeed, this pipe need not be over 100 metres in length - perhaps less. The amount of ammonia in active circulation, under these conditions need not be more than 30 tons per hour. Due to the time required for heat transfers the detention quantity of ammonia in the generator tubes is likely to be about 20 tons.

(14) For that part of the cooling involving glacier ice, the movement of ammonia will be about 800 tons per day. The movement of ammonia depending on the recuperation of cold within the system needs another 2200 tons of ammonia per day, making a total of about 3000 tons of ammonia per day. Since the units will be situated very close together, it should be possible to establish a cycle of 15 minutes i.e. about 100 cycles per day, roughly. On this basis, the quantity of ammonia in the system could be limited to about 30 tons. To be on the safe side, we have provided a total quantity in the system of 100 tons of ammonia. The excess will tide over a period of 30 minutes total stoppage of condenser effect, or 3 hours of stoppage of the glacier unit.

361. The application of cold to seawater, the formation of ice free of occlusions and the effectual separation of ice from brine all presented serious problems in the early days of seawater desalination by freezing. All these and other problems have been overcome to the extent needed to manufacture fresh water from seawater in competition with other processes. The answers may not be exactly the same in Iceland, because it is necessary to carry the freezing to a much greater degree

than customary in seawater desalination, and there is no plant experience in this area. Obviously a certain amount of research and experimentation will be required. The laboratory trials of Nelson and Thompson[1] have established that crystallisation of sodium sulphate occurs smoothly in laboratory apparatus: whether it will be equally so on a plant scale remains to be seen. It is to be hoped that the differences between our project and the seawater desalination plants will be only differences in degree, and not of type. Some of our design features will also be found in designs prepared for the Office of Saline Water of the U.S. Government.[2]

252. **Plant for freezing 10,000 tons seawater per day**

(1) **Notes**

(i) The following is the theoretical basic data, which have to be adjusted for practical conditions.

(ii) The temperature reference datum for calculating enthalpies (heat contents) is an arbitrary -40°C, selected for the sake of convenience in calculations.

(iii) The term "giga" represents 10^9 (thousand million) and "tera" 10^{12} (million million).

(iv) Free energies of solutions have been disregarded for the present.

1/ Reference 31.

2/ For an example see reference 67, page 216.

Unit	Quantity tons/hr		Temperature °C		Enthalpy (gigacalories)	
	In	Out	In	Out	In	Out
(2) **Pre-cooler**						
(i) Seawater feed	417	417	10	0	20.8	16.7
(ii) Glacial river	400	400	3	10	17.2	20.0
(iii) System ice	17	17	0	3	0.7	2.1
(3) **Freezer**						
(i) Seawater feed	417	417	0	-	16.7	-
(ii) Ice formed	...	367	..	-2/-9	...	-16.5
(iii) Sodium sulphate	...	3	..	-9/-13	...	0.1
(iv) Residual brine	...	47	..	-14	...	1.3
(v) Ammonia liquid	97	...	-13	...	1.2	...
(vi) Ammonia vapour	...	97	..	-13	...	33.0
(4) **Refrigerator**						
(i) Ammonia feed (gas)	97	...	0	...	33.6	...
(ii) Ammonia liquid	...	97	..	0	...	1.9
(iii) Condenser ice (solid/liquid)	396	396	0	0	15.8	47.5

(5) The foregoing represent the theoretical figures of heat exchange under perfect conditions. In practice, as stated before there will be losses and wastages, for which an allowance of 30-35 per cent has to be made. Thus, of the total hourly requirements of 396 tons of ice, about 280 tons will be recuperated from the system, while about 120 tons per hour must come from outside - say, 3000 tons per day, or 1 million tons per year roughly. This is the quantity it is proposed to use from the glacier.

(6) In the same way, if there is perfect interchange of heat in the ammonia evaporation/absorption system, there would be no requirement of steam from outside. In practice, however, the same 30 per cent losses are to be expected, and there will be a steam demand of roughly 20 to 25 tons per hour (say about 200,000 tons per year) to make up the difference.

363. Plant for sodium chloride etc.

(1) This plant is the simplest of all. For reasons of simplicity, convenience, economy, low capital and low labour requirements we would recommend a simple grainer pan, which is nothing but a tank fitted with steam coils or submerged combustion unit at the bottom. The steam heats up the bottom brine, and the heat is conveyed to the surface by convection and thereafter escapes into the air as water vapour. The brine will be pretreated with magnesium carbonate to bring down all calcium, thus reducing tendency to scale. The tank could be built of concrete. The production would be continuous, and the salt produced would be removed continuously through an elevator belt. A covering is necessary to create a draft and allow the vapour to be carried off. The heat content of the vapour could be recovered, but as the quantities involved are comparatively small, the recovery may not be an important factor.

(2) The bromine recovery plant is standard. The hot brine (by now fairly concentrated in bromide) is allowed to trickle down a stoneware tower fitted with perforated stoneware plates. Chlorine gas and steam are forced in at the base of the tower. The emanating vapours carrying the bromine are condensed in a separate tower. The bromine is subjected to some simple purification, maybe redistilled, dehydrated and bottled. At a later stage of the overall project the bromine could be processed into intermediates within the complex.

(3) Recovery of magnesium chloride and potash. When the brine has parted with most of its sodium chloride and all its bromine, the residual liquor would contain mainly magnesium chloride and potassium chloride - the former predominant. The treatment of this brine is quite simple and standardized. Indeed, it dates back to the oldest chemical processes 250 years ago, and remains just as effective nowadays. Potassium chloride is added to the brine to balance the excess magnesium chloride, and the brine is chilled. A double salt of magnesium chloride and potassium chloride (carnallite) deposits, and is removed. This carnalite on being dissolved in water separates into its constituents, and magnesium chloride dissolved preferentially, leaving the potassium chloride as solid. No important problems are indicated in this area.

(4) The residual brine contains a medley of salts. Some may turn out to be of special value, but for the present it would be profitable to heat the brine to dryness and sell the product as trace elements (micro-nutrient factors). A market has already been developed in the USA by one of the major salt producers for this product and there is a possibility that Iceland can capture some part of this market. Anyway, the product would be in demand as cattle feed accessory in Europe itself.

XI. Costs and Economics

364. (1) As might have been expected, this section proved to be the most difficult, and we cannot be confident that the figures quoted are accurate. We do, however, claim order-of-magnitude accuracy, and it is hoped that this degree of accuracy will suffice for management decisions whether to spend money upon further investigations.

(2) The main reason for uncertainty in costing is that so much of the plant has to be designed ad hoc. This is the only way of securing that economy of construction and operation which the peculiar situation offers. The availability of large quantities of geothermal steam is a great advantage, but only if used in the proper way. There is insufficient experience around the world to decide on designs and costs. The availability of practically unlimited and convenient low-temperature cooling capacity in the glaciers of Iceland is another great advantage, but this is said to be terra incognita, so far as power engineering is concerned,[1] and there is no past experience to go on. There may be no great problems involved in putting glacial ice to engineering use. On the other hand, a glacier has considerable life in it, and there are ice currents within it which, if slower than ocean currents, are almost as powerful, and engineering design may have to be quite conservative. There is need, therefore, for considerable margin and flexibility in our estimates.

365. (1) Before giving our own estimates, we wish to refer to some related estimates which have already been published. The U.S. Government's Office of Saline Water, has issued a publication "A standardized procedure for estimating costs of saline water conversion" (1956).[2] This publication recommends a certain form for preparing estimates, and also provides graphs of plant costs related to size. These costs are approximations, but reliable approximations, and we have thankfully accepted the quoted figures, with a surcharge of 50% to meet the price increases since 1955 and the additional costs (relatively unknown) of putting up big plants in remote corners of Iceland. In some items a considerable extrapolation has been found necessary but it is believed that the extrapolation has yielded conservative results.

1/ Pilot trials are mentioned in reference 83A, page 110.

2/ Reference 60

(2) The Office of Saline Water's publication No. 32 ("Further development of a direct-freezing, continuous wash-separation process for saline water conversion" 1959)[1] provided us with a good deal of guidance. The Consultants (The Carrier Corporation) had to assume artificial production of both heat and cold, whereas in the Icelandic situation these resources are assumed to exist in nature, and the main problems are to put them to use. Furthermore, the OSW process was to spray seawater into an evacuated chamber, whereas the process suggested for Iceland is the indirect freezing method. Hence the parameters in their study could not be directly applied to the Icelandic case. Nevertheless, the information provided in that publication was of real value, and we take the opportunity to express our gratitude for the public service rendered by the Government of the USA in making the information so freely available.

(3) The following pages are reproduced from the publication mentioned, by kind permission of the Office of Saline Water:

1/ Reference 67

CAPITAL COSTS

Absorption Refrigeration, Single Effect

	Plant Capacity GPD			
	15,000	100,000	500,000	10,000,000
	Thousand Dollars			
Essential Plant Costs				
1. Total Special Equipment			110.6	
2. Total Standard Equipment			241.0	
Total PIE	66.7	122.1	351.6	6,328.8
3. Erection & Assembly	20.0	36.6	105.5	1,398.6
4. Instruments	2.7	4.9	14.1	253.1
Total Essential Plant Costs	89.4	163.6	471.2	8,480.5
Other Plant Costs				
5. Raw Water Supply	.15	1	5	100.0
6. Product Storage	.15	1	5	100.0
7. Service Facilities	-	-	-	633.0
8. Contingencies	9.0	16.6	42.1	939.1
9. Engineering	9.9	18.2	52.9	1,033.0
10. Interest During Construction	4.3	8.0	23.3	454.5
11. Site	.045	.3	1.5	30.0
Total Plant Investment	112.9	208.7	601.0	11,770.1
Working Capital				
Sixty Days Prod.	2.0	7.3	26.0	833.0
Total Capital Costs	114.9	216.0	633.0	12,680.1
Cost/Gal/Day of Prod.	7.67	2.16	1.27	1.27

ESTIMATING OF OPERATING COSTS

Capacity: 10,000,000 gpd

	Dollars Per Stream Day			
	Absorption Refrigeration Single Effect	Absorption Refrigeration Three Effect	Compression Refrigeration Water Vapor	Distillation 8 Eff.-LTV
Essential Operating Cost				
1. Fuel	-	-	-	-
2. Electric Power ($0.007/kwhr)	1,090	1,090	397	147
3. Steam ($0.55/(MBTU)	8,000	3,780	2,060	6,410
4. Other Materials	-	-	-	273
5. Supplies	178	197	262	171
6. Operating Labour	596	401	332	478
7. Maintenance Labour	178	197	262	171
8. Payroll Extras	116	90	89	97
Total	10,158	5,755	3,402	7,747
Other Operating Cost				
9. General Overhead	267	206	202	224
10. Amortization	2,655	2,945	3,918	2,560
11. Taxes & Ins.	711	789	1,049	686
Total	13,791	9,695	8,571	11,217
12. Interest on Working Capital	100	70	62	81
Total	13,891	9,765	8,633	11,298
Owning and Operating Cost/1000 gal.	1.39	0.98	0.86	1.13

(4) The OSW's Consultants advised that at that time the largest feasible size of plant using standardised components would be 500,000 US gallons per day, and this size was fixed as the module. The 10 mgpd plant comprised 20 modular units, and was estimated to cost 18 times the cost of the module because of minor site economies. The size of 500,000 gpd is equal to about 1900 tons per day. The Icelandic requirement is about 5.3 times as much. Since it is to be custom built, and is expected to take maximum advantage of the available facilities and site conditions, it is expected that the capital cost of the Icelandic plant would cost only about 3.4 times the cost of the module used in the OSW study. With the 50% surcharge as mentioned before, the present-day cost of the Icelandic plant would be of the order of US $3 millions, allowing for plant, instrumentation, buildings, transport, erection, contingencies, engineering services, site, and everything else. This figure is likely to be conservative.

(5) The conclusion in the OSW study is that fresh water could be produced from seawater by a freezing process at a cost of between 60 and 100 cents per 1000 gallons (say 15 to 25 cents per ton).

366. We next refer to another study, No. 41 "Saline Water Conversion by Freezing" (1960) made for the Office of Saline Water by the Cornell University School of Chemical Engineering.[1/] In this study an estimate has been made for a 10 million gpd plant, using a secondary refrigerant. This plant is about twice the size of the project planned for Iceland. The investment cost is given as $6.437 millions which, with the usual 50% surcharge and reduction by six-tenths factor rule, comes to $5.7 millions for Iceland. This is considerably higher than the amount worked out in the previous exercise, namely, about $3 millions. The reason is probably because the process demanded large compressors and connected piping. The cost of the resultant water, however, is much less, namely 38 cents per 1000 gallons, equivalent to about 10 cents per ton. We accept the latter figure as workable, but on capital we shall look for a more economical process.

367. We had available a copy of detailed estimate by Sveirn Einarsson of Iceland on a proposed steam and power plant to be located at Namafjall in Iceland.[2/] The paper contains much material which appears to have relevance to the case under investigation: unfortunately, it is in the Icelandic language, and no translation

1/ Reference 69

2/ Reference 125

was available. Rather than misinterpret its information we preferred to leave it aside for later consideration.

368. (1) With this background, we proceed to a rough costing estimate. The capital items, operational requirements and manning table will be found in Annex VIII. The following would then be the operating costs per annum:

		$
Materials, energy, etc.		200,000
Salaries and staff expenses		500,000
Interest on capital 6%		180,000
Amortization 5%		150,000
Miscellaneous		70,000
	Total	1,100,000

(2) Annual returns may be computed as follows:

	Tons	$
Sodium chloride	60,000	700,000
Sodium sulphate	10,000	200,000
Magnesium products	12,000	300,000
Potash	2,000	70,000
Bromine	200	140,000
Trace elements	1,000	100,000
Sundries and Margin	-	90,000
	Total	1,600,000

(3) According to these computations, the gross return will be of the order of $500,000 per annum. This is a very rough figure, and more detailed analysis is required to infuse more reliability into it. These further calculations are pointless unless the engineering studies are completed.

(4) In the next stage, the production of sodium sulphate will be increased by 20,000 tons, with very little extra equipment. The additional advantage to the project is likely to be of the order of $300,000 per annum.

(5) The potential of a single locality in Iceland is likely to be up to ten times the size of the initial plant, on the availability of seawater, ice and steam. Such expansions will not require much more staff and the capital

installations are also likely to cost much less than on a pro rata basis. This prospect is the one of main interest to Iceland.

(6) An advantage of this project is the amount of foreign exchange which will be earned or saved.

XII. Potential Locations

387. (1) Very large quantities of materials have to be moved, - 3 1/2 million tons of seawater, 1 million tons of ice, 1 1/2 million tons of steam, and about 1/2 million tons of everything else, making a total of 7 million tons every year in the first stage alone, and four times as much in the final plant. It is obvious that distances are of the greatest importance and the cost of even a few miles of needless transport can be many thousands of dollars.

(2) The essentials are access to a seaport, seawater, a large glacier, and geothermal steam, with nearby availability of electricity as a need of secondary importance. These prerequisites make it easy to narrow down the choice. The first two conditions require that the plant be located within the 10-mile coastal strip of land around the main island. The third condition, availability of glacial ice, cuts out most of the areas automatically. Of Iceland's eighteen permanent glaciers, there are only three which can be regarded as possible candidates, namely, (in order of size)

Vatnajökull	(South East)
Mýrdalsjökull	(South)
Drangajökull	(North West)

(3) Vatnajökull is a huge glacier, covering 3300 square miles of land, and towering 6700 feet into the air. It began its present growth only about 2500 years ago, but is now the biggest single mass of ice in the whole of Europe. The icecap covers several huge volcanoes, which have been known to erupt with titanic violence. Several living volcanoes are known to exist in the bowels of Vatnajökull, and several more are suspected to exist, because of the outbursts of glacial rivers (Jökullhlaup) from under Vatnajökull every few years. Large snouts of the Vatnajökull, of respectable glacier size in their own right, come right down to the seabeach. There is a seaport on Vatnajökull's south-eastern flank. In almost all respects, therefore, one of the outlet glaciers of Vatnajökull would qualify for the location of the marine chemicals factory.

(4) The same reasoning applies as well to Mýrdalsjökull. It is only one-tenth the size of Vatnajökull, but even so has nearly 500,000 million tons of ice in it. The snouts of several of its outlet glaciers approach very close to the sea. There is a large thermal area (Torfajökull) on the land side (north) of Mýrdalsjökull. One of the main thermal belts of Iceland is suspected to reach to the sea right under Mýrdalsjökull. A river emanating from the sea

side of this glacier has such a strong odour of hydrogen sulphide, as to earn for itself the soubriquet of Foul River. There are clear indications (e.g. fuma-roles) of large reserves of geothermal energy close to the site. All told, therefore, Mýrdalsjökull also qualifies as a candidate.

(5) Drangajökull is a much smaller glacier. There are stories that it is showing the effects of age and drying up gradually, but the final death of the glacier is still many years away, too many to accept this possibility as a decisive factor. There is geothermal energy close by, and, best of all, ideal conditions for a first-class harbour. The area is undeveloped, and the Government would be happy to see a modern industry established in this essentially farming/fishing area.

(6) All three of the selected areas, therefore, could be considered. There are several other factors to be taken into account. Some favour one of the three possible locations, while others are in favour of another. A fair choice is impossible at this stage, and the question must be put off for close and detailed evaluation. It is indeed a relief to find that there are actually three suitable areas, not one.

(7) Through the kindness of the Director of the Icelandic Research Council, Mr. Steingrimur Hermannsson, the Mission was given an opportunity to take a fairly close and thorough look at one area in a helicopter. Dr. Jon Eythrsson, one of Iceland's leading glaciologists, was kind enough to come along to give us briefing, guidance and explanation. A part of the Mýrdalsjökull (Sólheimajökull) was chosen for the visit, because it was the closest and most accessible in other respects as well. The results of this aerial survey fully confirmed the conclusions reached by a study of the maps, and discussions with various persons, that Mýrdalsjökull was, indeed, quite suitable for this factory. In fact, the indications were more promising than we could have hoped for. Sólheimajökull (an outlet glacier of the great Mýrdalsjökull) had a huge snout about 1 to 2 kilometers across, and rising from near sealevel to about 500 meters in a very short distance. The quantity of solid ice in this snout alone amounted to several thousand million tons. Just under the precipitous front of the glacier was a huge flat plain about 2 kilometers across and 10-12 kilometers long, of loose unconsolidated materials, very easy to work with. The glacier generated the Jökulsá River, which at flood was about 300 meters across, but not very deep. This is a perennial river. The river at this stage is already in its flood plain, and hence it is very easy to pump seawater back to the glacier along the

riverbed with comparatively little effort. The temperature of the river water is always at about 0°C near the glacier: hence the seawater would be effectively chilled by the time it is needed for processing. Within 2 or 3 kilometers of Sólheimajökull there was a large waterfall, the Skógarfoss, which, if need be, could be harnessed to produce all the electric power the scheme could possibly need, at reasonably low cost. There are several other large and powerful waterfalls across the peneplanal escarpment nearabouts. Then, about 3 to 5 kilometers from Sólheimajökull there was a large hot spring area discharging hot water and steam. The Jökulsá River was also called the Foul River, because it always generated the stench of hydrogen sulphide - a clear indication of subterranean thermal action. Hence there was a likelihood that somewhere in the neighbourhood large resources of steam could be tapped. Within 7 or 8 kilometers there was Dyrhólacy, which the Government is thinking of using as an oceangoing seaport. The preliminary studies had already been completed. All told, the visit to the glacier was an unqualified success, and gave ample promise of providing all the natural resources required by the project.

(8) Although the Sólheimajökull site proved so favourable, there may be other places even more favourable. If not, it is of no consequence, as the place already located fulfils every major requirement.

(9) An important factor in the situation is the availability of steam for power. There are about 14 areas in Iceland where steam comes out of the ground under sufficient pressure to enable power to be generated at low cost. The biggest such area is at Tórfajökull, just north of the prospective salt plant site at Mýrdalsjökull.[1] The southern side of the glacier has not yet been much explored for geothermal potential, but there is a likelihood of locating high-pressure steam in this place.

1/ "Some information about Iceland: its water resources and energy potential" - "Orkumal", March 1965.

388. Design Data

(1) There are so many variables and so many possible combinations, that it is impossible to arrive at the optimum combination with the data presently available. The optimisation of all the factors is a job for advanced calculations, most easily done by computer. Accordingly, a priori methods have been used in calculations. These methods will, it is hoped, afford order-of-magnitude accuracy and, as will be seen, this suffices to indicate that the scheme is likely to be an economic success.

(2) In two of the three locations recommended, the snout of the outlet glacier comes to within 3 to 9 kilometers (2 to 6 miles) from the sea. Most of the ground over this distance is relatively flat and gently sloping. Towards the glacier end, however, the slope increases noticeably. The slope of the valley sides increases even more sharply, and the snout itself displays an almost precipitous front.

(3) Induction of the seawater from the sea to land is no great problem. Conducting the brine to within a comparatively short distance from the glacier snout is also fairly simple and easy. For the seawater to be taken up the sharply-rising acclivity is, however, likely to be costly, although not difficult. It would, therefore, be a distinct advantage to stop the seawater at some place before the main acclivity is reached, and do the freezing there.

(4) One difficulty which arises is how the cold of the glacier is to be used. The glacier is a moving river of ice, the speed being more towards the top than the bottom and more towards the centre than at the banks. The top centre, therefore, is generally the fastest moving: hence it creates a sort of rolling action, which may bring bottom material inside the glacier to the top.

(5) The occasional outbursts of water from the glaciers (jökullhlaup) can be of frightful violence, and one jökullhlaup can for a time have a bigger flow than the world's biggest permanent river, the Amazon.[1] Anything in the path of this raging torrent is liable to be swept away within minutes. For this reason, the brine treatment works, if located in the flood plain of the local jökullhlaup, must be adequately protected by strong dykes, capable of resisting the powerful flow of a river in sudden flood. More important, it is impossible to locate the ammonia plant in the path of the glacier. It must be situated on the high ground alongside the glacier, or on the top of the glacier, fairly far

1/ "Icelandic Review", Vol V, page 37.

removed from the snout, and so proportioned that glacier movements will not overbalance it.

(6) There is a possibility of creating an artificial waterway leading from glacier to freezing plant, and floating ice down from the glacier along this channel to the seawater freezing plant. In theory this appears to be simple, efficient and cheap. In practice several difficulties will have to be overcome, and some risks will have to be taken. There are so many advantages in this method that it deserves every consideration. However, it is necessary to base the costs on the most unfavourable possibilities: if even this yields profitable results, every improvement will be an additional bonus.

(7) It is also assumed that steam can be found somewhere along this line. The exact location of the steam source will not matter a great deal, because geothermal steam is inherently cheap, and can readily bear the cost of transport for a few kilometres. The same holds good for electric power.

389. Upon a consideration of all these factors, one working system would be as follows:

(1) Seawater induction will be done close to sea, treated if necessary, and pumped to elevated tank.

(2) The seawater will be piped 3 to 6 km. (2 to 4 miles) along a canal on high ground, to freezing works close to the acclivity approach to the glacier snout. The canal will be kept filled with glacier water, which will run out to sea.

(3) The freezing plant and auxiliaries (salt grainer, etc.) will be located on the sides of the valley, on hard ground. This plant will have its own ammonia refrigerating system, operating on the temperature difference between the ice produced from the seawater, and the steam produced from the salt grainer house or from steam wells.

(4) It is assumed that there would be a loss of 30 to 35% in recuperating the cold of the seawater ice. It is proposed that this 30 to 35% be made good by the action of glacial ice and geothermal steam. This plant will be situated atop the glacier or in a pond nearby, and the most unfavourable situation is taken for calculations and design.

(5) It is proposed that ammonia vapour be condensed and liquefied here, and piped down to the seawater freezing plant, where it will be evaporated and absorbed in weak ammonia water to form strong aqua ammonia. This aqua ammonia will be boiled, and the vapour piped back to the glacier top refrigerator for condensing. The weak liquor from the distillation will return to the seawater freezing plant outside the aqua ammonia pipe. This pair of pipes could be a heat exchanger.

(6) The liquid ammonia will be piped down to the seawater plant inside a channel or conduit carrying glacial water and ice. This will keep the liquid ammonia cold without having to use insulation lagging.

The foregoing represents one practical system, and it is an economical system. It is not claimed that this is the best design, but it will serve quite well for all elementary costing purposes. Optimization and refinement of figures will be left to the consulting engineers. Other designs have been covered earlier in this report.*

390. On the basis of all the foregoing, the outline of a possible industrial set-up in the neighbourhood of Sólheimajökull is as follows:

(1) Seawater is inducted at depth from near the mouth of the river Jokulsa, and piped along the riverbed back to almost the foot of the outlet glacier Sólheimajökull. The quantity needed would be 10,000 tons per day, roughly 120,000 US gallons per hour. The seawater passes through heat exchangers, cooled by the water of the river close to the glacier and some ice from within the system. The water can be treated or processed on the way.

(2) This seawater, now at a temperature close to $0^{\circ}C$, is subjected to freezing by the action of a refrigerant (like ammonia or butane) in two or three stages, the final stage producing ice and brine at about $-8^{\circ}C$.

(3) This brine is now cooled to a temperature of about $-13^{\circ}C$, and the sodium sulphate which is produced is removed continuously by an elevator boot. The residual brine is treated for recovery of common salt, potash, magnesium chloride, bromine, etc. (The presence of some residual sulphate can cause disturbance,

---

* See, for instance, paragraphs 325 to 330 ante.

and the remedy has to be worked out.) The residual brine is evaporated to dryness. This is all that is involved in the first stage of the industrial complex.

(4) The utilities consist of the heating and cooling systems, as described above. Iceland has had many years of experience in mining and using geothermal energy, and there is sufficient expertise within the country to design, execute, operate and manage this part of the project. Iceland has operated refrigeration plants, both shore-based as well as ship-based, for many years. The design of this special plant may have to be done by specialised consulting engineers abroad, and part of the fabrication as well. The erection, operation and management of the plant is within the capabilities of Icelandic personnel.

XIII. Conclusions and Recommendations

391. (1) The Mission, therefore, finds that there is fulfilment of all essential pre-conditions for a successful chemical industry complex, based upon seawater, and utilizing geothermal steam, with glacial cold. These projects, therefore, deserve to be investigated in depth.

(2) The Government also indicated its desire to obtain an opinion on the Lindal suggestions to use geothermal brine in a flash distillation system for production of salts. The Mission finds it attractive, but has insufficient data to come to final conclusions. Accordingly, it recommends investigation of this process as well.

(3) The Government also requested advice on a proposal to boil down straight seawater for salts, using geothermal steam.

(4) The cost of investigations, on a very rough estimate, may be as follows:

UNIDO proposal	: $400,000
The Lindal project	: $300,000
Simple evaporation of seawater	: $ 30,000

If the Lindal project is taken up as a subsidiary of the UNIDO's project, the cost would be reduced to US $200,000.

(5) A certain amount of electrical power is needed, whatever process is applied. The cheaper the power, the greater the extent to which it could be used. Because of the abundance of rainfall and the hilly nature of the country, Iceland has good prospects of generating hydroelectric power. The State Electricity Board (now the National Energy Authority) has made exhaustive investigations of hydro-electric potential. It would appear that Iceland can produce up to 10 million kw power on a 35 per cent utilization basis. Not more than 3 to 4 per cent of this potential is being utilized at present. The cost of the power under the most favourable circumstances is likely to be low and the fertilizer factory of Iceland is today working on a tariff contract providing for a charge of 0.77 mil per electrical unit for off-peakload power. This figure is now unrealistic, because of rapid increase in costs, and an aluminium company was forced to settle for 2.5 mils per unit on a continuous basis. A plant which can avoid the peakloads may get more favourable terms, but even 2.5 mils is an attractively low rate, which would permit considerable utilisation of power. Hence the question of electrical power should also be investigated.

Annex I

List of Useful Publications

I - General

1. American Chemical Society - Advances in Chemistry Series, No. 27 - "Saline Water Conversion" - Washington, D.C. 1960
2. American Institute of Mining Engineers - "Industrial Minerals and Rocks" - 1960

3A. Anderson "Refrigeration in America", Princeton University Press, 1953

3B. Aries and Newton - "Chemical Engineering Cost Estimation" - New York, McGraw Hill, 1955

4. Armstrong and Miall - "Raw Materials from the Sea" - New York, Chem. Publ. Co., 1946
5. Barnes - "Chemical aspects of oceanography" - Royal Inst. of Chem., London, 1955
6. "Challenger" Expedition Reports (several dates)
7. Chilton - "Cost Engineering in the Process Industries" - New York McGraw Hill, 1960
8. Clarke - "Data of Geochemistry" - U.S. Geological Survey, Bull. 770 Washington, D.C. (Sixth Ed., 1967)
9. Drydon and Winfield - "Chemical Engineering Costs" - Special Report 29, 1963 Ed. Columbus, Ohio
10. Ellis - "Fresh water from the Ocean" - New York, Ronald Press, 1954
11. Faith, Keyes and Clarke - "Industrial Chemicals" - New York, Wiley, 1964
12. George, Riley and Crooker - " Preliminary process development studies for desulphating Great Salt Lake brines and seawater" - U.S. Bureau of Mines No. RI 6928, 1967
13. Glassett and Anderson - "Recovery of salts from the waters of the Great Salt Lake" - University of Utah, Bull. 128, 1964
14. Grabau - "Principles of Stratigraphy" - New York, Dover (1964 reprint)
15. Hahl and Mitchell - "Dissolved-mineral inflow into Great Salt Lake", - Utah Geological and Mineralogical Survey Bulletin Nos. of 1963
16. Happel - "Chemical Process Economics" - New York, McGraw Hill
17. Harper - "Chemical Engineering in practice" - New York, Reinhold 1954
18. Harvey - "Chemistry and Physics of seawater" - Cambridge University Press, 1957

G-931

8G.01.10
AD.87.04
ILL 5.5+10

2 OF 2

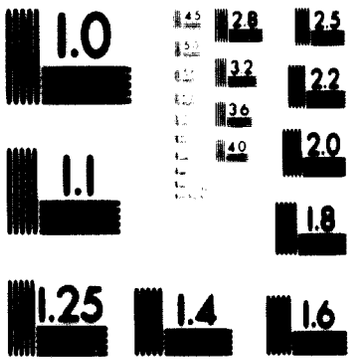

MICROCOPY RESOLUTION TEST CHART
NATIONAL BUREAU OF STANDARDS
STANDARD REFERENCE MATERIAL 1010a
(ANSI and ISO TEST CHART No. 2)

24x
F

19. Kallarud - "Process for the recovery of chemicals from seawater" - Am. Inst. Chemical Engineers, May 1967

20. Kaufman - "Sodium Chloride" - ACS Monograph No. 145, New York, Reinhold, 1960

21. Kirk-Othmer - "Encyclopedia of Chemical Technology" - New York Interscience (continuing issue)

22. Lunge - "Sulphuric Acid and Alkali, Vol. III" - London, Gurney Jackson, 1923

23. Manly - "Drake's Refrigeration Service Manual", New York, Drake and Co., 1954

24. McIlhenny and Ballard - "The sea as a source of dissolved chemicals" - 144 ACS Meeting, Los Angeles, 1963

25. Mero - "The seas as a source of insoluble chemicals and minerals" - 144 ACS Meeting, Los Angeles, 1963

26. Martin - "Industrial Chemistry" - New York, Philosophical Press (various volumes, various dates)

27. Mellor - "Comprehensive Treatise on Inorganic and Theoretical Chemistry" - Longmans, Green (various dates)

28. "Modern Chemical Processes" (series of volumes) New York, Reinhold (various dates)

29. Mountjoy - "Industrialisation and Under-developed Countries" London, Hutchinson, 1963

30. National Research Council - "The Physical and Chemical Properties of Seawater" - Publication No. 600, Washington, D.C.

31. Nelson and Thompson - "Deposition of salts from seawater by frigid concentration" - U.S. Dept. of Commerce, OTS No. PB 111606 (1954)

32. Perry - Chemical Business Handbook - New York, McGraw Hill, 1962

33. Perry - Chemical Engineers Handbook - New York, McGraw Hill, 1964

34. Peters - "Plant design and economics for engineers" - New York, McGraw Hill, 1958

35. Phalen - "Technology of salt making" - U S. Bureau of Mines, Bull. 146, 1917

36. Ratton - "Handbook of Common Salt" - Madras, Higginbotham, 1923

37. Resources Agency of California - "Saline water conversion activities in California" - Sacramento, 1963

38. Riegel - "Chemical Machinery" - New York, Reinhold

39. Riegel - "Industrial Chemistry" - New York, Reinhold, Fifth Edition

40. Rogers - "Industrial Chemistry" - New York

41. Shreve - "Chemical Process Industries" - New York, McGraw Hill, Third Edition, 1966

42. Spiegler - "Salt Water Purification" - New York, Wiley, 1962

43. Spiegler - "Principles of Desalination" - Academic Press, New York, 1966

44. Svedberg, Johnson and Fleming - "The Oceans" - New York, Prentice-Hall

45. Teeple - "The industrial development of Searle's Lake brines" - ACS Monograph 49, New York, Chemical Catalogue Co., 1929

46. Thorpe - "Dictionary of Applied Chemistry" (various volumes, various dates)

47. Tinbergen - "The design of development" - Nederlands Economic Development Institute

48. Tressler and Lemon - "Marine Products of Commerce" - New York, Reinhold

49. UN - "Water Desalination in developing countries" - New York, 1964 (No. 64:II.B.5)

50. UN - "Water for industrial use" - New York, 1958 (58:II.B.1)

51. UNESCO - Journal "Arid Zone"

52. U.S. Bureau of Mines - "Mineral Facts and Problems" - Washington, D.C., 1964

53. U.S. Bureau of Mines - Minerals Yearbook (annual)

54. Van Noy and others - "Guide for making cost estimates for chemical-type operations" - U.S. Bureau of Mines, RI-4534, 1949

55. Ver Planck - "Salt in California" - Division of Mines, San Francisco, Bull. No. 175 of 1957

56. Vilbrandt and Dryden - "Chemical Engineering Plant Design" - New York, McGraw Hill, 1959

57. Weinberger and de Lapp - "By-products from saline water conversion plants" - U.S. Office of Saline Water, 1964

58. Woolrich and Bartlett - "Handbook of Refrigeration Engineering" - New York, van Nostrand, 1948.

List of Useful Publications

II - Office of Saline Water, U.S. Dept. of Interior

	PB NUMBER	TITLE
59.	161373	Demineralisation of saline waters
60.	161375	A standardized procedure for estimating costs of saline water conversion
	OSW NUMBER	
61.	161382	Research on saline water purification by freezing
62.	9	The minimum energy requirements for seawater conversion processes
63.	10	Research and development of processes for desalting seawater by freezing
64.	23	Development of direct-freezing continuous wash-separation process for saline water conversion
65.	27	Availability of geothermal energy for demineralisation of saline water
66.	28	Investigation of the availability of geothermal energy for demineralisation of saline water
67.	32	Further development of a direct-freezing wash-separation process for saline water conversion
68.	40	Saline water conversion by direct freezing with butane
69.	41	Saline water conversion by freezing: An integral processing unit using a secondary refrigerant
70.	72	A study of large-size saline water conversion plants
71.	94	Solidification and separation of ice from saline water
72.	96	Research on saline water conversion by freezing
73.	104	Thermodynamic properties of saline water
74.	113	Development of the direct-freeze separation process
75.	118	Study of multi-phase ejectors for freezing process desalination systems
76.	127	Nucleation and growth of ice crystals
77.	136	Thermodynamic properties of seawater
78.	179	Research on saline water conversion by freezing

	OSW NUMBER	TITLE
79.	180	- do - and by reverse osmosis
80.	229	Thermodynamics and kinetics in hydrate and freezing processes
81.	235	Use of waste heat for production of fresh water
82.	242	Research on saline water conversion by freezing
83A	-	Saline Water Conversion Report (Annual), 1966
83B	-	Ditto, 1967 (expected September 1968)

List of Useful Publications

III - Publications on Geothermal Energy

84. Allen and Day - "The Hot Springs of the Yellowstone National Park" - Carnegie Institute of Washington, Publication 466 (1935)

85. Banwell and others - "Physics of the New Zealand Thermal Area" - NZ Dept. of Sc. - Ind. Res. Bull 123

86. Bulletin of Volcanology - (periodical)

87. Clark - "Geothermal Studies" - Carnegie Institute of Washington, Yearbook 60 (1961)

88. Grange - "Geothermal Steam for power in New Zealand" - NZ Dept. of Sc. Ind. Res. Bull. 117

89. Geological Survey of the USA - various publications

90. Gutenberg - "Internal Constitution of the Earth" - New York, Dover Press (1951)

91. Jacobs - "The Interior of the Earth" - Advances in Geophysics series, New York, Academic Press (1956)

92. McNitt - "Exploration and development of geothermal power in California" - California Div. of Mines and Geol., Spl. Rept. No. 75 (1963)

93. Pacific Science Congress: Several reports on geothermal energy

94. United Nations - "Comprehensive Energy Surveys - An outline of procedure" - New York, (No. 67.II.F14)

95. United Nations Conference on New Sources of Energy, Vols. 2 and 3. "Geothermal Energy", Rome, 1961 (63.1.36 and 37)

96. U.S. Dept. of Interior - "Geothermal Energy" - Press Releases, 29 March 1967 and 11 May 1967

97. Waring - "Thermal Springs of the USA and other countries of the world" - U.S. Geol. Surv. Prof. Paper No. 492 of 1965

98. White - "Geothermal Energy" - U.S. Geological Survey, Circular 519 of 1965

99. World Power Conference Reports - Sections dealing with geothermal energy

List of Useful Publications

IV - References to Iceland

100. Bodvarsson, Gunnar - "An appraisal of the potentialities of geothermal resources in Iceland" - Timarit, 1963, No. 8

101. Central Bank of Iceland - "Iceland, 1966"

102. Council of Economic Affairs - "Iceland, General Economic Review 1965/66" - RVIK 1966

103. European Cement Bureau - "Cembureau No. 48 - Iceland's Cement Industry", Paris 1967

104. Eythorsson, Jon - "Vatnajokull" - Bokafelagid, RVIK, 1960

105. Glaciological Society of Iceland - "Jokull" (periodical) RVIK

106. Hansson, Olefur - "Facts about Iceland" - Cultural Fund 1965

107. "Icelandic Review" (periodical), RVIK

108. Lindal, Baldur - "Extraction of salt from seawater by multiple-effect evaporators" UN paper E/CONF.35/G.27 of 1961

109. Lindal, Baldur - "Geothermal heating for industrial purposes in Iceland" - UN paper E/CONF.35/G.59

110. Lindal, Baldur - "Greenhouses by geothermal heating in Iceland" - UN paper E/CONF.35/G.32

111. Lindal, Baldur - "Production of salt from thermal brines" 1967, National Research Council of Iceland

112. Lister and others - "Solheimajokull" - Museum Rerum Naturalium, RVIK, 1953

113. Ludviksson, Vilhjalm and Lindal, Baldur - "Valuable products from seawater" 1965 - National Research Council of Iceland

114. Manistee Engineering Associates - "Extraction of salt from seawater in Iceland" - UNTAO/ICE 5, 1960

115. Mens and McLellan - "Report on a geothermal power station"

116. National Economic Council of Iceland - "Growth and Composition of National Product" - 1966, RVIK

117. National Economic Council of Iceland - "Iceland - General Economic Review 1965-66", RVIK

118. OECD: "Iceland - Economic Survey" - Paris, 1966

119. "Orkumal" - (periodical) - State Electricity Authority, RVIK

120. Patel, M.S. - "Possibility of production of salt in Iceland" - State Electricity Authority, Reykjavik, 1959

121. Stefansson and others - "The salinity of the sea at the shore off southwest Iceland" - Rit Fiskideildar, Vol.II, 1961

122. Stefansson - "North Icelandic Waters" - Rit Fiskideildar, Vol.III, 1962

123. Surtsey Biological Conference Reports - Icelandic Research Council, 1965

124. Vedrattan (Weather Bureau) - Annual Reports

125. Vermir SF - "Power from geothermal steam" - RVIK, 1967

Annex II

Seawater, Composition, Properties, Behaviour

A. Composition

1. **Elements**

(From: "1966 Saline Water Conversion Report", U.S. Dept. of the Interior, Office of Saline Water[1])

Element	Parts per million	Element	Parts per million
Chlorine	18,980	Carbon	28
Sodium	10,561	Strontium	13
Magnesium	1,272	Boron	4.6
Sulphur	884	Silicon	4.0
Calcium	400	Fluorine	1.4
Potassium	380	Nitrogen	0.7
Bromine	65	Aluminium	0.5

(Note: Dissolved gases not included).

2. **Ionic pattern**

(As percentage of total solids)

	(1)	(2)	(3)	(4)	(5)	(6)	(7)
Cations:							grams/litre
Sodium	30.593	30.47	30.53	30.65	30.85	30.41	10.89
Magnesium	3.725	3.53	3.79	3.75	3.82	3.82	1.33
Calcium	1.197	1.67	1.21	1.21	1.16	1.18	0.43
Potassium	1.106	0.96	1.12	0.93	0.89	1.17	0.40
Anions:							
Chloride	55.292	55.01	55.46	55.22	55.30	55.45	19.68
Sulphate	7.692	8.00	7.59	7.88	7.78	7.97	2.74
Carbonate	0.207	0.14	0.30	0.10	0.07	?	0.08
Bromide	0.188	0.13	?	0.14	0.14	?	0.07

1/ Reference 83A page 311.

(1) Mean of 77 samples from all over the world
(2) Baltic Sea
(3) North Atlantic, between Norway and Faroes
(4) White Sea
(5) Arctic Ocean between White Sea and Novaya Zemlya
(6) Siberian Ocean
(See Clarke - Data of Geochemistry, 5th Ed. p.129)
(7) Grabau: "Principles of Stratigraphy", Dover, 1960 p.148

3. Recipes for synthetic seawater

Salt	Parts per million			
	a	b	c	d
Sodium chloride	27213	26518	23476	26726
Magnesium chloride	3807	2447	4981	2260
Magnesium sulphate	1658	3305	-	3248
Sodium sulphate	-	-	3917	-
Calcium sulphate	1260	-	-	-
Calcium chloride	-	1141	1102	1153
Potassium sulphate	863	-	-	-
Potassium chloride	-	725	664	721
Calcium carbonate	123	-	-	-
Sodium bicarbonate	-	202	192	198
Bromide	76(mg)	83(Na)	96(K)	58(Na)
Boric acid	-	-	26	58
Others	-	-	27	20
Total	35,000	34,421	34,481	34,442

a - Armstron & Miall: "Raw Materials from the Sea" - Reference 4, page
b, c, d - Sverdrup, Johnson & Fleming: "The Oceans" - Reference 44, page
(See Tallmadge - "Minerals from Seasalt" Ind. Eng. Chem. July 1964, p.45)

B. Properties of Icelandic Seawater

1. Average salinity is about 3.5%, but actual salinity can vary from near zero in the Baltic during spring thaws, to nearly 4% in pockets.

2. "Atlantic water" is usually defined as any seawater with salinity over 35 parts permille.

"Polar surface water" has salinity from 30 to 34.5% par s permille and temperature below 0°C.

"Arctic bottom water" has uniform salinity of about 34.92 parts permille and temperature below 0°C.

3. The temperature of surface seawater in summer rises to a maximum of about 10°C in August.

4. Close to the coast the seawater loses salinity near river mouths during spring and summer thaws. However, this freshening effect is confined only to the surface 3 - 5 metres. Below that depth the seawater retains its original salinity.

(See Stefansson - "North Icelandic Waters"[1] and Stefansson and others - "Salinity of North American Waters"[2] both published by Icelandic Fisheries Research Institute)

1/ Reference 122.

2/ Reference 121.

C. Behaviour of seawater on evaporation

Table showing the order of separation of salts from seawater

Density of the seawater or of the mother liquor at 12.5°C. (Baumé scale)	Specific gravity (after Clarke)	Volume after evaporation and crystalization in litres	SEPARATION AT THE SUCCESSIVE DENSITIES IN GRAMS								
			Sesquioxide of iron Fe_2O_3	Calcium carbonate $CaCO_3$	Calcium sulphate $CaSO_4 \cdot 2H_2O$	Sodium chloride NaCl	Magnesium sulphate $MgSO_4$	Magnesium chloride $MgCl_2$	Sodium bromide NaBr	Potassium chloride KCl	Total precipitated
1	2	3	4	5	6	7	8	9	10	11	12
1.0258	1.0258	1.0000									
1.0506	1.0500	0.5330	0.0030	0.0642							0.0672
1.0820	1.0836	0.3160		trace							trace
1.1067	1.1037	0.2450		trace							trace
1.1304	1.1264	0.1980		0.0530	0.5600						0.6130
1.1653	1.1604	0.1445			0.5620						0.5620
1.1786	1.1732	0.1310			0.1840						0.1840
1.2080	1.2015	0.1120			0.1600						0.1600
1.2208	1.2138	0.0950			0.0880	3.2614	0.0040	0.0078			3.3240
1.2285	1.2212	0.0640			0.1476	9.6500	0.0130	0.0356			9.8462
1.2444	1.2363	0.0390			0.0700	7.8960	0.0282	0.0434	0.0728		8.1084
1.2627	1.2570	0.0302			0.0144	2.6240	0.0174	0.0150	0.0358		2.7066
1.2874	1.2778	0.0230				2.2720	0.0254	0.0240	0.0518		2.3732
1.3177	1.3069	0.0162				1.4040	0.5382	0.0274	0.0620		2.0316
Total precipitated			0.0030	0.1172	1.7488	27.1074	0.6242	0.1532	0.2224		29.9762
Remainder in mother liquor						2.5885	1.8545	3.1640	0.3300	0.5339	8.4709
Sum total of salts			0.0030	0.1172	1.7488	29.6959	2.4787	3.3172	0.5524	0.5339	38.4471

(From Grabau - "Principles of Stratigraphy", Dover Edition 1960, p.347) - Reference 14.

D. Behaviour of seawater on freezing

0 Temp. Centigrade	Grams brine	Sulphate ion SO_4'' In brine %	In brine gm.	In solid gm.	In solid %
-2.2	1000	1.90	1.90	-	0
-4.4	309	5.97	1.90	-	0
-6.9	147	8.61	1.26	0.64	34
-8.6	68	8.85	0.60	1.30	68
-10.6	66	5.48	0.36	1.54	81
-13.1	39	3.81	0.15	1.75	92
-16.2	25	2.69	0.07	1.83	96
-20.6	25	1.77	0.04	1.86	98
-26.4	8	1.06	0.01	1.89	99
-30.0	3.6	0.69	0.00	1.90	100

(From Nelson and Thompson - "Deposition of salts from seawater by frigid concentration") - Reference 31

Annex III

Main products from seawater and their uses

Oxide Hydroxide	Carbonate Bicarbonate	Chloride	Sulphate
	SODIUM		
Paper pulp	Paper pulp	Edible salt	Paper pulp
Glass	Glass	Food seasoning	Glass
Soluble silicates	Soluble silicates	Pickling foods	Dyes
Soap	Soap	Fish preservation	Chemicals
Bleaching	Detergents	Water treatment	Detergents
Rayon	Beverages	Soap making	Medicine
Synthetic fibres	Baking	Dye making	
Alumina	Medicine	Hides and skins	
Scouring	Textiles	Caustic soda	
Cleaning	Alkali	Chlorine	
Etching	Drugs	Soda ash	
Alkali	Ceramics	Medicine	
Drugs	Metallurgy	Sodium metal	
Rubber	Chemicals	Potassium chlorate	
Metallurgy	Petroleum	Agriculture	
Petroleum	Photography		
	Tanning		
	Gas		
	Foams		
	Fire extinguisher		
	MAGNESIUM		
Alkali	Oxide	Cement	Cement
Cement	Rubber goods	Ceramics	Medicine
Insulator	Insulator	Textiles	Soap
Refractory	Alkali	Paper size	Sizing
Abrasive	Medicine	Mag. metal	Wood treatment
Mag. metal	Plaster	Soap	
Cement	Asbestos goods	Wood treatment	
Lithography	Inks		

MAGNESIUM (continued)

Medicine	Paints
Water treatment	Varnishes
Plaster	

CALCIUM

Mortar	Lime	Dust-laying	Plaster
Alkali	Glass	Refrigeration	Brewing
Caustic soda	Paper	Medicine	Desiccant
Insecticide	Cement	Chemicals	Boards
Medicine	Plaster	Soil treatment	
Fertilizer	Rubber	Water treatment	
Paper pulp	Asphalt		
Tannery	Medicine		
Gas cleaning	Fertilizer		
Dehydrant	Agriculture		
Ammonia	Flux		
Soda ash	Metallurgy		
Iron and steel	Alkali		
Water treatment	Artificial stone		
Soap	Whiting		
Rubber	Putty		
Varnish	Ceramics		
Bricks	Paints		
Agriculture	Rubbers		

Properties of Refrigerants

(From Woolrich and Bartlett: Handbook of Refrigeration Engineering)[1]

	Chemical Formula	Freezing pt °C	Boiling pt 1 atm. °C	Critical Temp °C	Critical pressure kg/cm 2	Specific ht. vap. Cp stated °C	Specific ht. vap. Cr stated °C	Latent heat of vaporisation at -15°C cals per gm	Vapor pressure at -15°C kg/cm 2	Vapor pressure at 30°C kg/cm 2
Ammonia	NH_3	-78	-33	169	115	0.524	0.400	327	2.43	1.20
Sulphur dioxide	SO_2	-72	-10	179	80	0.152	0.118	93	0.83	3.70
Carbon dioxide	CO_2	-56	*-77	31	60	0.199	0.153	157	23.30	73.00
Methyl chloride	CH_3Cl	-98	-29	178	68	0.199	0.155	108	1.47	66.60
Freon 11	CCl_3F	-111	23	198	44	0.137	0.121	47	0.16	1.02
Freon 12	CCl_2F_2	-158	-30	111	41	0.144	0.127	39	1.85	6.00
Freon 21	$CHCl_2F$	-135	7	183	52	0.136	0.116	61	0.36	1.73
Freon 22	$CHClF_2$	-160	-40	96	49	0.150	0.126	52	3.02	12.12
Freon 113	$C_2Cl_3F_3$	-45	47	214	34	0.163	0.151	39	0.07	0.54
Freon 114	$C_2Cl_2F_4$	-94	4	146	33	0.163	0.150	34	0.47	2.04

* Sublimation point

1/ Reference 58

Annex VI

Particulars of Icelandic Glaciers

(Private Communication by Mr. Jon Eythorsson)

	NAME	AREA (Sq. km.)
1.	Vatnajökull	8332
2.	Hofsjökull	1000
3.	Hofsjökull, eastern	20
4.	Langjökull	1028
5.	Myrdals and Eyjafjallajökull	828
6.	Torfajökull	16
7.	Tindafjallajökull	25
8.	Tungnafellajökull	32
9.	Ok	8
10.	Eiriksjökull	28
11.	Drangajökull	166
12.	Snafellajökull	20
13.	Thrandarjökull	28
14.	Snaofell	5.5
15.	Herdubreid	2.5
16.	Fönn in Nordfjördur	2.2
17.	Hlödufell	2
18.	Hekla	4
19.	Small glaciers between Skagafjördur and Eyjafjördur	70

PROCESSING OF SEAWATER (UNITS OF 1000 t/y - 3.5 MILLION TONS GROSS) ANNEX VII A

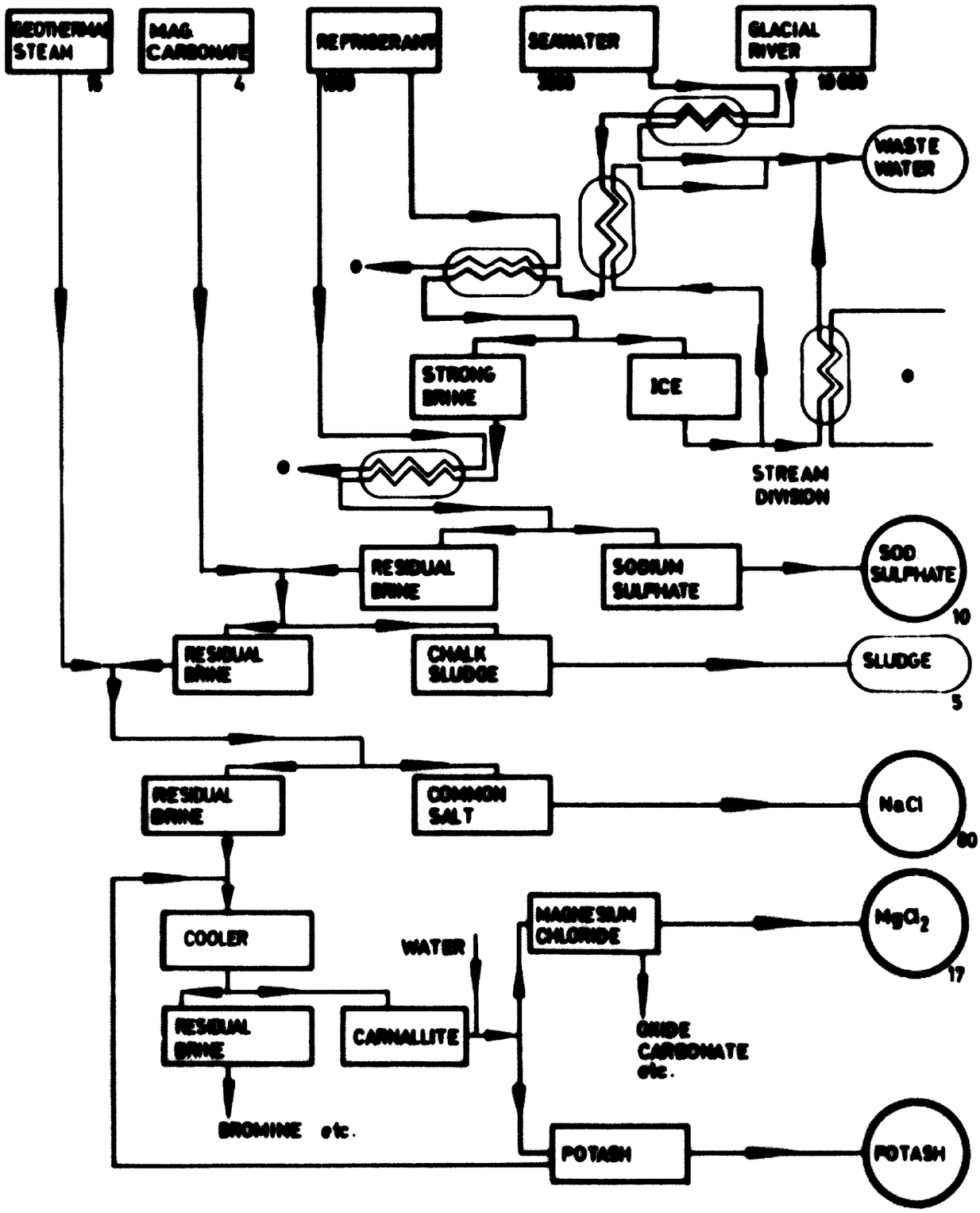

All figures anhydrous basis for salts

● See ANNEX VII C

ICELAND REPORT
VIENNA 1988
THIAGARAJAN

ANNEX VII B

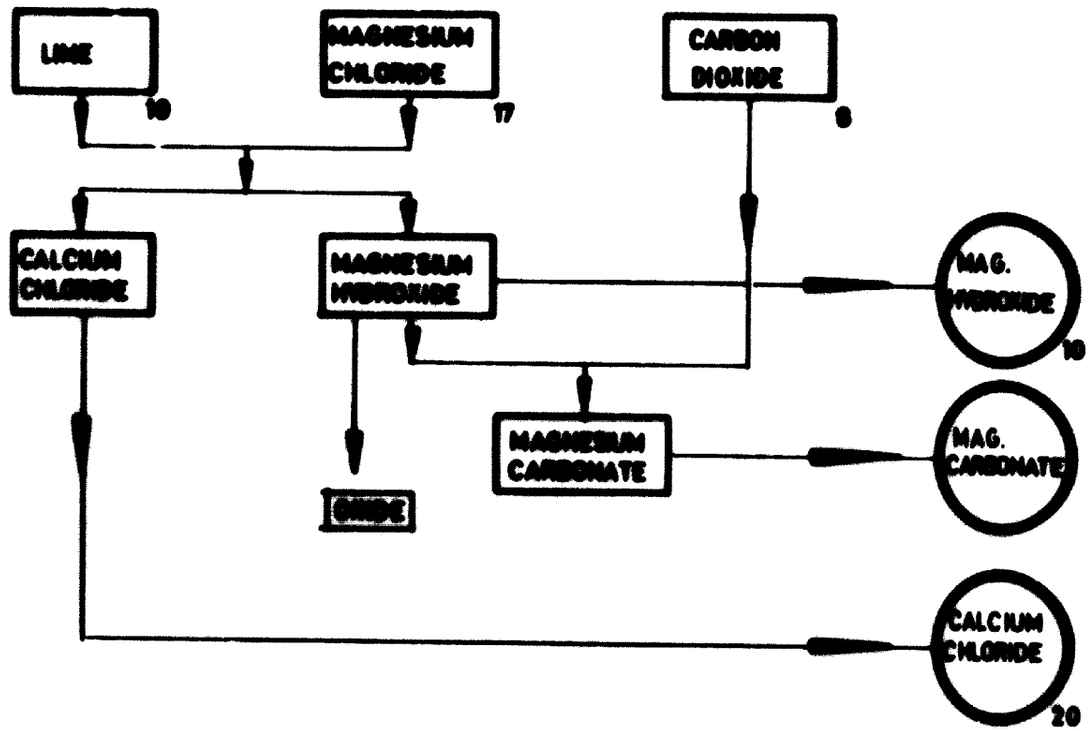

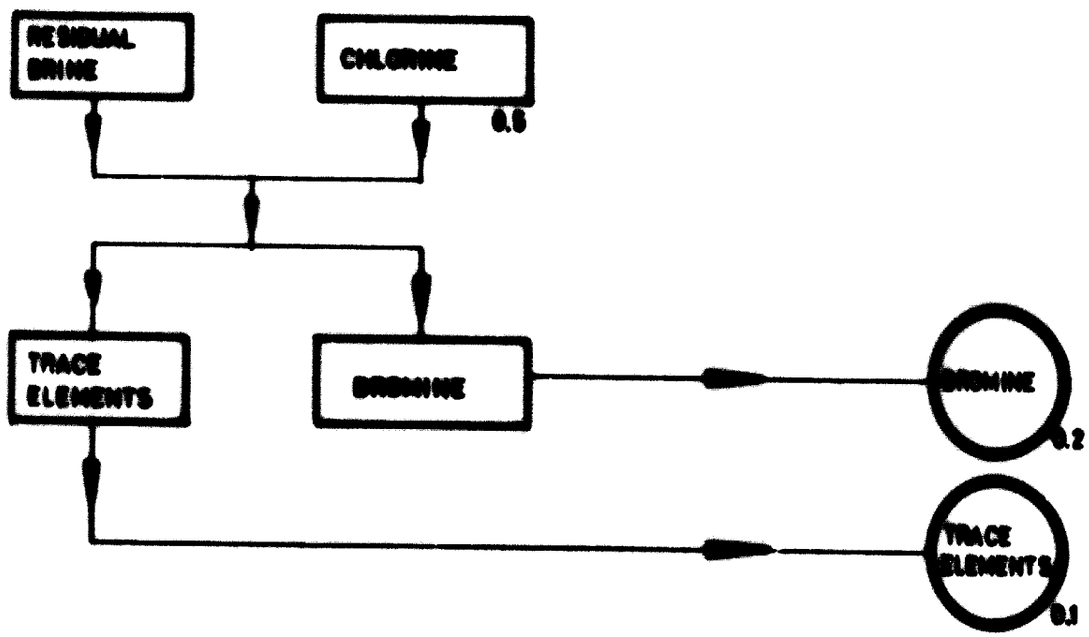

ICELAND REPORT
VIENNA 1988
THIAGARAJAN

OUTLINE OF SUGGESTED REFRIGERATION SYSTEM 1000l/y UNITS ANNEX VII C

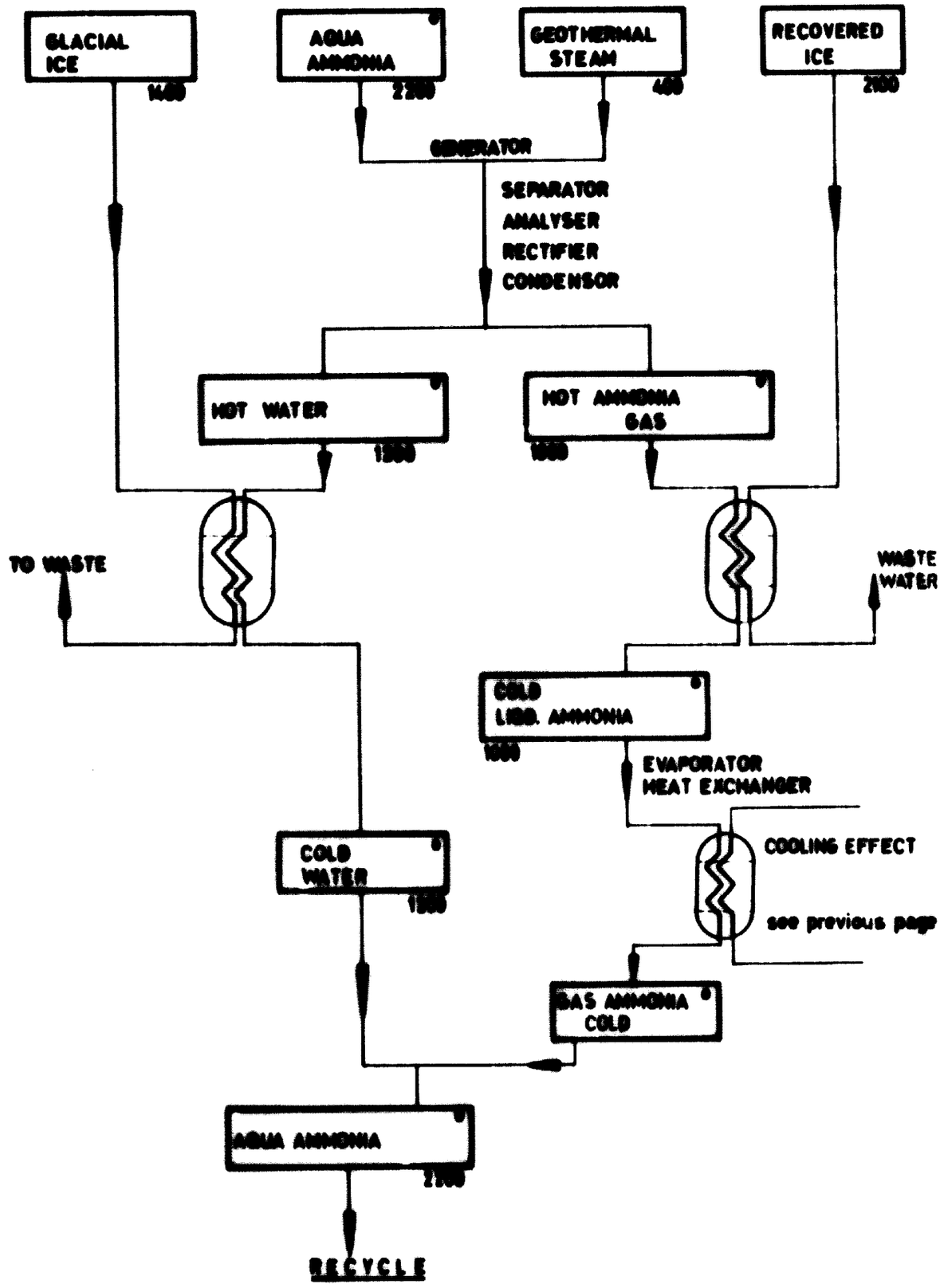

* TOTAL QUANTITY IN 30000 PASSES PER YEAR

ICELAND REPORT

VIENNA 1968

THIAGARAJAN

MATERIAL BALANCE SCHEMATIC REFRIGERATION SYSTEM ANNEX VI D

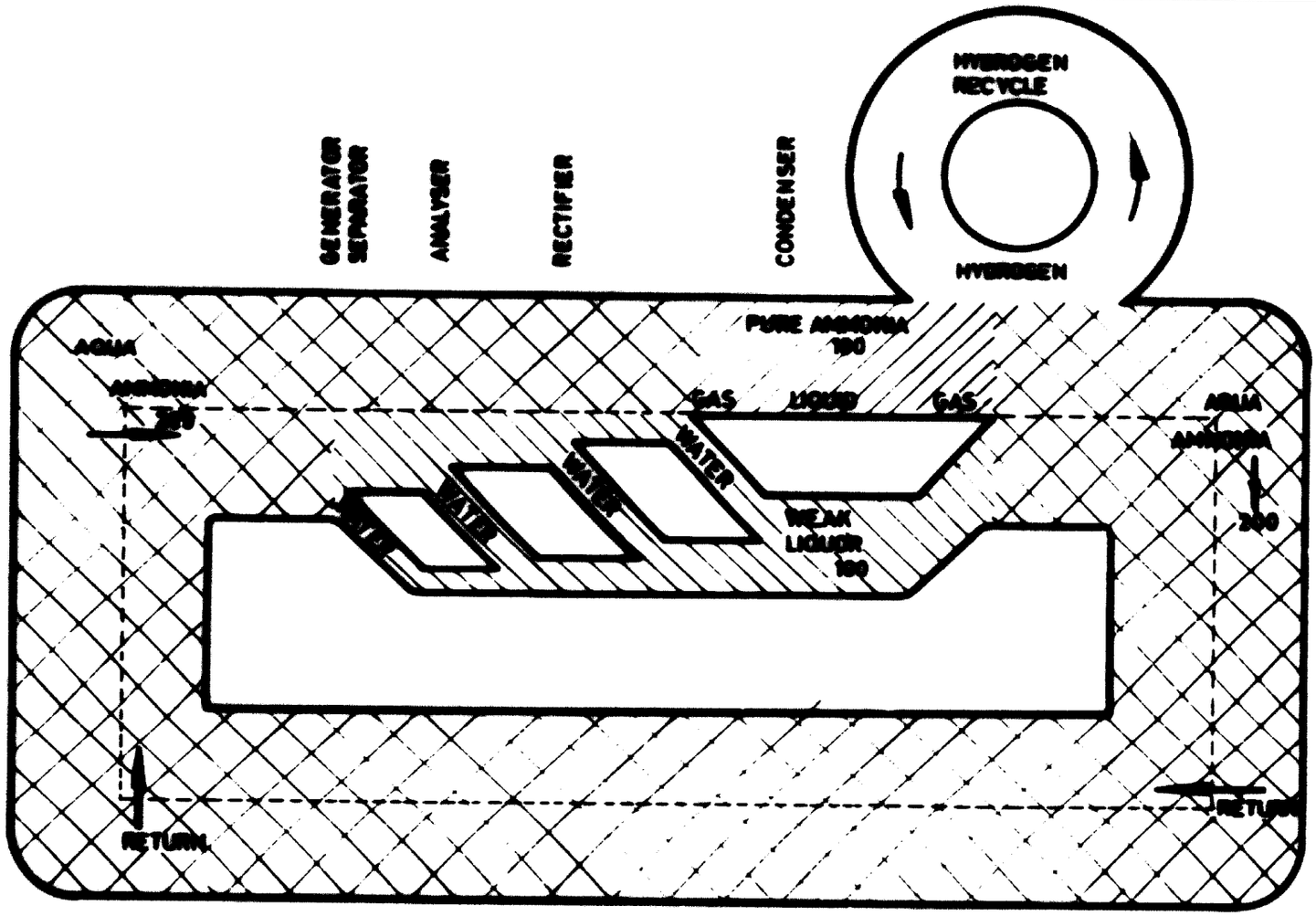

ICELAND REPORT

VIENNA 1968

THIAGARAJAN

PLANT LAYOUT IN TENTATIVE DESIGN

ANNEX E

PLAN

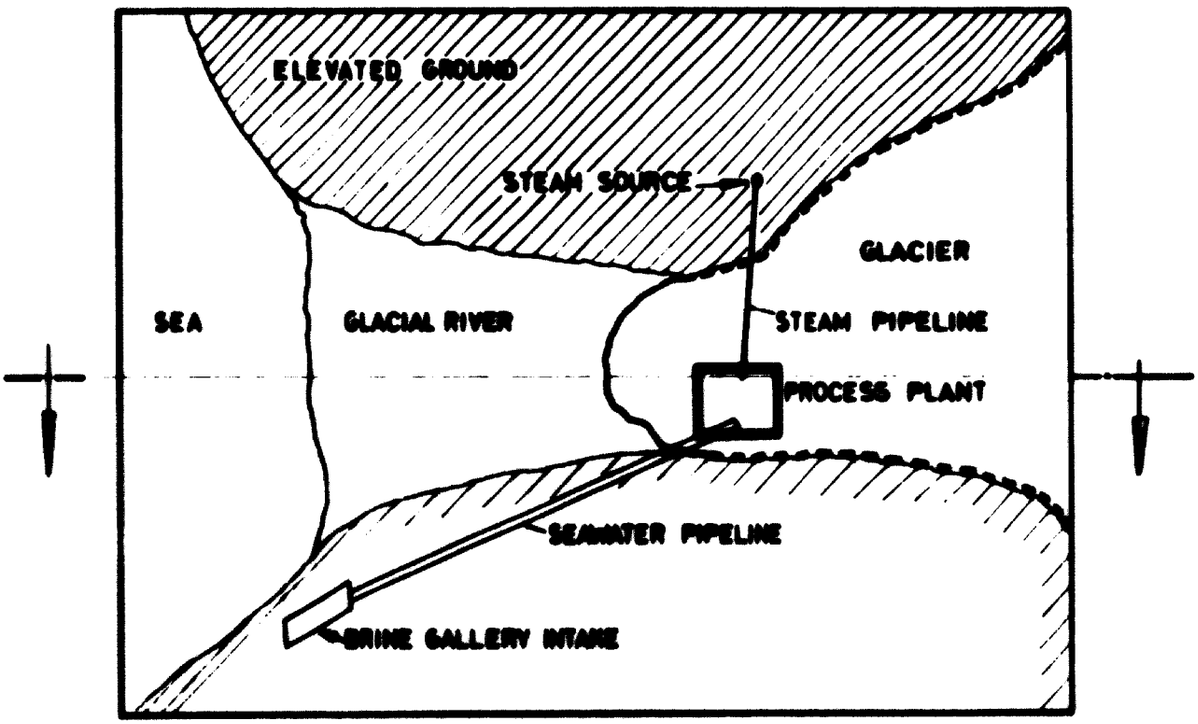

SECTION

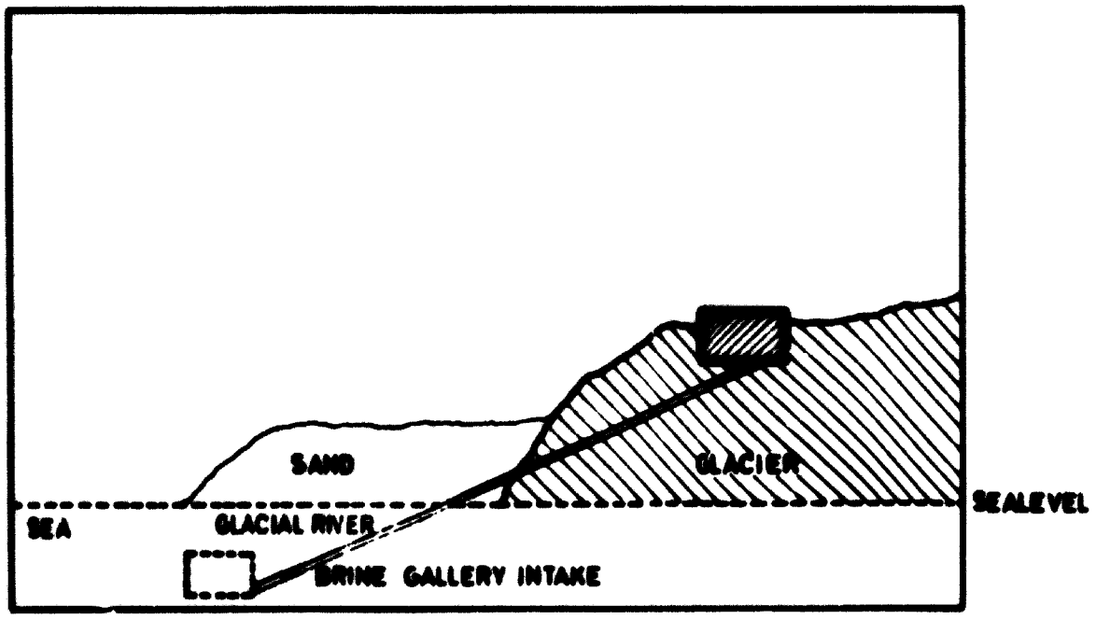

ICELAND REPORT

VIENNA 1988

THIAGARAJAN

SCHEMATIC SITE PLAN OF THE UNIT OPERATIONS

ANNEX VII F

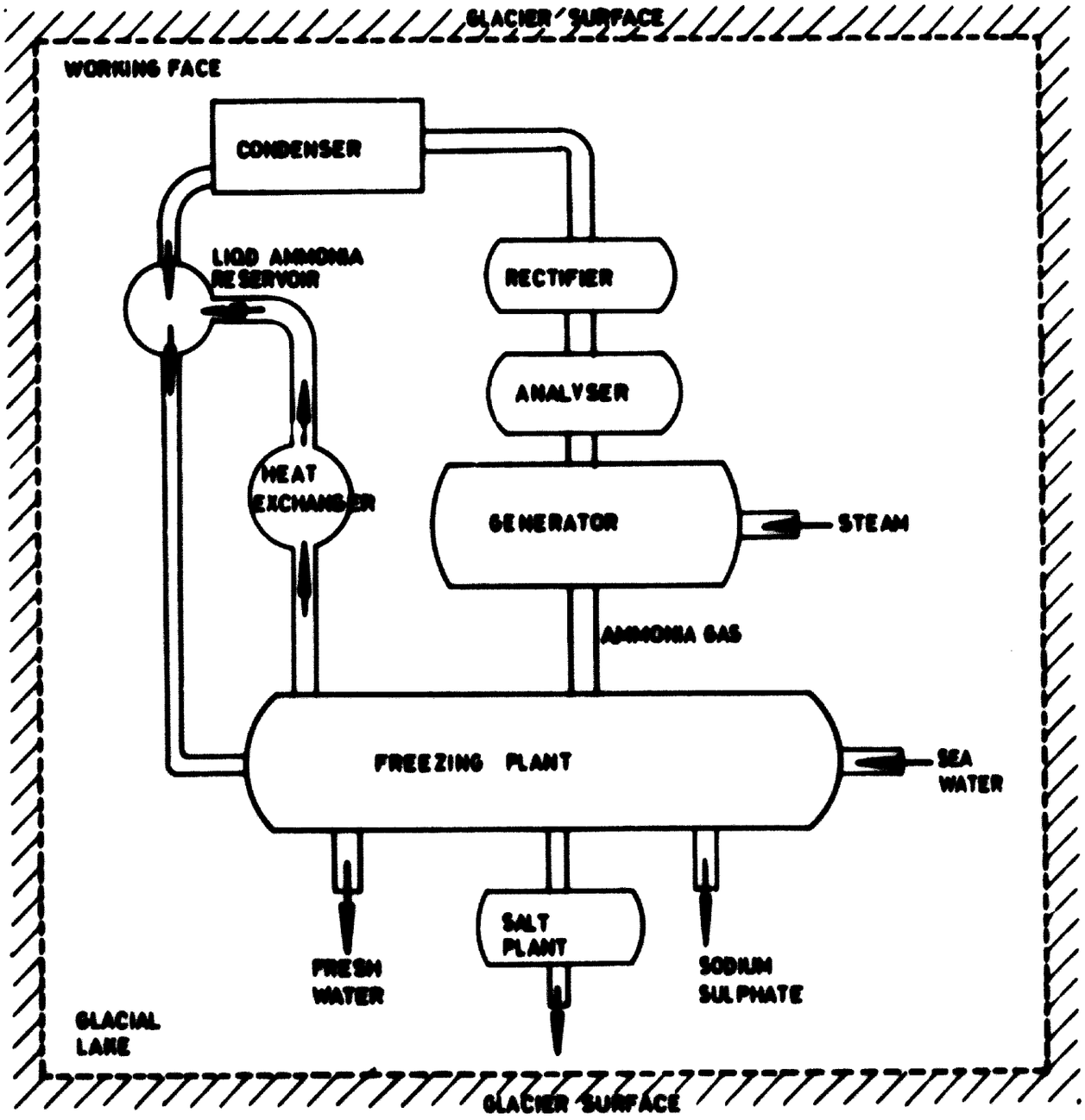

ICELAND REPORT

VIENNA 1968

THIAGARAJAN

Annex VIII

Costs

(All figures are approximations)

1. Capital items	$
Seawater induction unit, including storage and piping	200,000
Refrigerator unit, main	200,000
Refrigerator element, subsidiary	100,000
Pipelines, insulation, valves, controls	200,000
Heat exchangers	200,000
Workshop and laboratory equipment	50,000
Other minor units	100,000
Site, including preparation	100,000
Buildings[1] roads and drainage	200,000
Vehicles and tracks	100,000
Water supply, distribution and drainage	100,000
Electricity[2] distribution and control	100,000
Steam supply and controls, including piping	300,000
Freight, transport, erection	200,000
Engineering fees[3]	200,000
Interest during erection, start-up costs	100,000
Other miscellaneous items, working capital and margin for errors	650,000
	3,000,000

1/ Does not include residences. Includes heating.

2/ Battery limits only, low tension.

3/ Excluding preliminary investigations.

2. Manning table

		$ per annum
Manager and assistants	3	30,000
Secretarial, clerical and other office	8	30,000
Plant Superintendent and assistants	4	30,000
Shop clerical staff	4	15,000
Foremen and supervisors	6	30,000
Operators (10 per shift)	30	120,000
Maintenance and repair	10	50,000
Other staff	30	120,000
	95	425,000
Margin for leave, accidents, etc.	15	75,000
Payroll	110	500,000

3. Materials and energy

Fuel and other oils, tons	2000	60,000
Electricity, gigawatthours	30	75,000
Chemicals and sundries		65,000
Total		200,000

Annex IX

Costs of further investigations

1. The Thiagarajan Project

(1) The main requirements for the operation of this process are:

(1) Seawater
(2) Glacial ice
(3) Geothermal steam
(4) Suitable land

Iceland has 3,000 miles of coast, and seawater availability is guaranteed. There are three large glaciers in close proximity to the coast, and it takes but little effort to decide which of these three is suited for the purpose. Land is also a resource which Iceland has in great abundance, so it does not need much effort or expense to secure it.

(2) The limiting factor is then geothermal steam. It has already been ascertained that there are geothermal areas quite near by in all the three prospective locations. But the project requires large quantities of steam. The steam need not be under high pressure, but if high-pressure steam is available it will certainly be doubly advantageous because it is possible to use it for generating power, thus reducing cost of power to the project and also creating additional revenue.

(3) There are indications that large quantities of high-pressure steam may lie blanketed under the icecaps of the existing glaciers. Near Sólheimajökull, for instance, many furmaroles were observed. A certain amount of prospecting is necessary to locate the best sources of geothermal steam. In the past, such explorations had been done by drilling in a set pattern or at random, without any precise indication of availability. Nowadays, however, geophysical prospecting methods are available which are much easier, quicker, cheaper, and more effective. It is recommended that such a survey be first inaugurated. For this angle of study, a tentative amount of $150,000 may be allocated. The cost should cover only the lease of equipment and the time of the professionals needed to operate the equipment and analyse the results.

(4) Following the geophysical prospecting, some actual drilling is required. The National Energy Authority has two fully-equipped drilling rigs available, one big and one small. In view of the size of this project, and the need for large quantities of geothermal steam, it is the bigger rig which will have to be used. The cost of drilling has been quoted from several different sources (including UN Conference on New Sources of Energy) as about $50 per metre. It will probably be necessary to drill at least 4000 metres to prove a good field. Accordingly, a sum of $200,000 will be needed for this aspect of the work.

(5) Along with the field investigations, table, bench and yard investigations have to be done to work out a project report. Although much work has been done in related fields for the Office of Saline Water, a good deal of adaptation of the results is needed. We feel that for a complete and thorough job to be done, complete with detailed estimates, blueprints, etc., it will take $30,000 to $40,000.

(6) Thus, the total requirements of funds to carry the investigations to the next logical stage is of the order of $400,000.

2. <u>The Lindal Project</u>

(1) Practically the same arguments apply here as to the Thiagarajan Project. However, a substantial amount of field investigation has already been completed. The main requirement now is for geophysical exploration, followed by two fairly deep drill holes, one of 800 metres depth and the other of 1400 metres depth. The geophysical cost is likely to be about $150,000 and the drilling $100,000. The detailed engineering study may cost $30,000, making a total of $280,000 (rounded off to $300,000).

(2) If the study is made in continuation of or along with the investigations on the Thiagrajan Project, the costs may be substantially reduced, because the experiences are tranlatable. The whole cost may then be reduced to $200,000 or even less.

Annex X

Opinion of Dipl.Ing. Dr. Adalbert Orlicek, Professor of Chemical Engineering at the Technische Hochschule of Vienna, Austria - 14 June 1968

1.) Pressure and temperature in the pipelines depend on evaporating and condensing temperatures in the cooling system. Under the conditions explained in detail in point b) and c), 3000 metres of pipe would contain

liquid ammonia	24,4
vaporised ammonia	2,6
	27,0 tons

2.) Under the conditions of a driving force for the heat transfer of 5 degrees centigrade the ammonia would have to be evaporated at -18°C and a (partial) pressure of 2,1 atmospheres. The pressure in the condensor depends on the temperature of the cooling medias available: Water of 0°C (melting water of a glacier), glacial river 4°C and seawater 10°C. Therefore the temperatures in the condensor would be 2,8 and 14°C respectively and the pressures 5, 6, 6.8 and 8.3 atmospheres. For the transport of 43 t/h of ammonia the pipe diameter should be

for the liquid ammonia	125 mm
for the vaporised ammonia	800 mm

Under static conditions the pressure in the pipeline would be the same as in the condensor or evaporator respectively. (Neglecting hydrostatic pressure because of difference in level) the dynamic pressure difference in the pipeline (friction loss of velocity) is

vapor line	0,15 atmospheres
liquid line	0,40 atmospheres

These figures do not consider the influence of the inert gas (hydrogen or helium).

3.) The pipe diameters have been chosen

for the liquid	125 mm
for the vapor	800 mm

The velocity is 1,5 and 14 m/sec respectively.

4.) The advantage of the use of a cooling pond in the glacier would be that very big amounts of water of 0°C would be available so that a very low

temperature difference between hot and cold cooling water (of perhaps 2°C) would be possible. The other sources of cooling water (of 4 and 10°C) would not allow the use of small differences and therefore the temperature in the condensor would have to be 13 and 19°C for cooling with glacial river or seawater respectively. High temperature in the condensor means that more energy is necessary for the cooling system. We can estimate that cooling with glacial river would need 25%, seawater 48% more energy. The use of air (in summer times) would give even higher energy consumptions.

5.) The use of a conventional compressor refrigeration system would give very high and unjustified investments and a complicated plant. Because of the availability of geothermal steam only an absorption system can be considered as an economic and adequate proposal.

The Platen-Munters system has no doubt the advantage of a sealed system, without rotating machines and so on.

On the other hand should be considered that a transfer pump for liquid ammonia is a very simple component and that in the last years pumps of extremly high reliability have been developed.

To keep maintenance low a glandless canned motor pump could be chosen.

Annex XI

UNIDO Mission to Iceland on Seawater Chemical (1967)

Partial list of persons interviewed

(in Reykjavik, except where otherwise stated)

Asgeirsson, Torfi - Deputy Director, Economic Institute of Iceland
Bjornsson, Gudmundur - Consultant
Bjornsson, Hallgrimur - Industrialist
Bjornsson, Jakob - Electrical Engineer, National Energy Authority
Brodasson, Thorbjorn - Icelandic National Research Council
Einarsson, Sveinn - Managing Partner, Vermir SF, Consulting Engineers
Eliasson, Einar - Technical Director, Kisilidjan Ltd., Myvatnesveit
Eythorsson, Jon - Consulting Glaciologist
Gislason, Jakob - Director-General, National Energy Authority
Gudmundsson, Vesteinn - Production Manager, Kisilidjan Ltd., Myvatnesveit
Hallson, Sigurdur - Consulting Engineer
Hermannsson, Steingrimur - Director, Icelandic National Research Council
Ingolfsson, Brynjolfur - Secretary-General of the Ministry of Communications and Industry
Johanesson, Gudmundur - Superintendent, Hot Water Supply, Reykjavik City
Jonsson, Isleifur - Mechanical Engineer, National Energy Authority
Lindal, Baldur - Consulting Engineer
Magnusson, Magnus - Chairman, Executive Committee Icelandic National Research Council
Nikulasson, Snorri - Manager of Tannery
Olafsson, David - Member, Executive Committee, Icelandic National Research Council
Palmasson, Gudmundur - Geophysicist, National Energy Authority
Pêtursson, Pêtur - Kisilidjan Ltd., Reykjavik
Sampas, James G. - US Embassy
Schram, Gunnar - Secretary, Ministry of Foreign Affairs
Sigfursdottir, Mrs. Adda Bara - Climatologist, Weather Bureau
Sigvaldasson, Gudmundur - Geochemist, Industrial and Development Research Institute
Stefansson, Unnstein - Director, Marine Research Institute
Thordarsson, Runolfur - Chief Engineer, Ammonium Nitrate Fertiliser Plant Inc.
Valdimarsson, Olafur - Secretary, Ministry of Industries
Vestdal, Jon - Managing Director, State Cement Works, Akrones

Annex XII

Units and conversion rates
(working approximations)

Ton (US) = 2000 pounds = 0.89 long tons = 0.90 metric tons
Ton (British) = 2240 pounds = 1.12 US tons = 1.1016 metric tons
Ton (metric) = 2204 pounds = 1.10 US tons
Pound = 454 grammes
1 kilogram = 2.20 pounds
1 US ton water = 240 US gallons = 0.9 metric ton
1 US gallon = 0.8 Imperial gallon = 3.78 litres
1 foot = 30 centimetres
1 mile = 1.6 kilometres
1 kilometer = 0.62 miles
1 cubic meter = 35 cubic feet
1 cubic foot = 7.5 US gallons = 28 litres
1 British thermal Unit = 252 calories
1 kilowatt-hour = 1.34 Horsepower-hour = 3415 Btu.
1 kilogram per square centimeter = 14.22 pounds per square inch
1 atmosphere = 14.7 pounds per square inch
1 acre = 4840 square yards = 43,560 square feet
1 hectare = 10,000 square metres = 2.47 acres
1 metre = 1.09 yards = 3.28 feet
Kilo = 1,000 (10^3)
Mega = 1,000,000 (10^6) = 1,000 kilo
Giga = 1,000,000,000 (10^9) = 1,000 mega = 1,000,000 kilo
Tera = 1,000,000,000,000 (10^{12}) = 1,000 giga = 1,000,000 mega = 1,000,000,000 kilo

1 British Pound sterling = 2.8 US dollars = 120 Icelandic kronur (July 1967)
= 2.4 " " = 137 Icelandic kronur (July 1968)

C-954

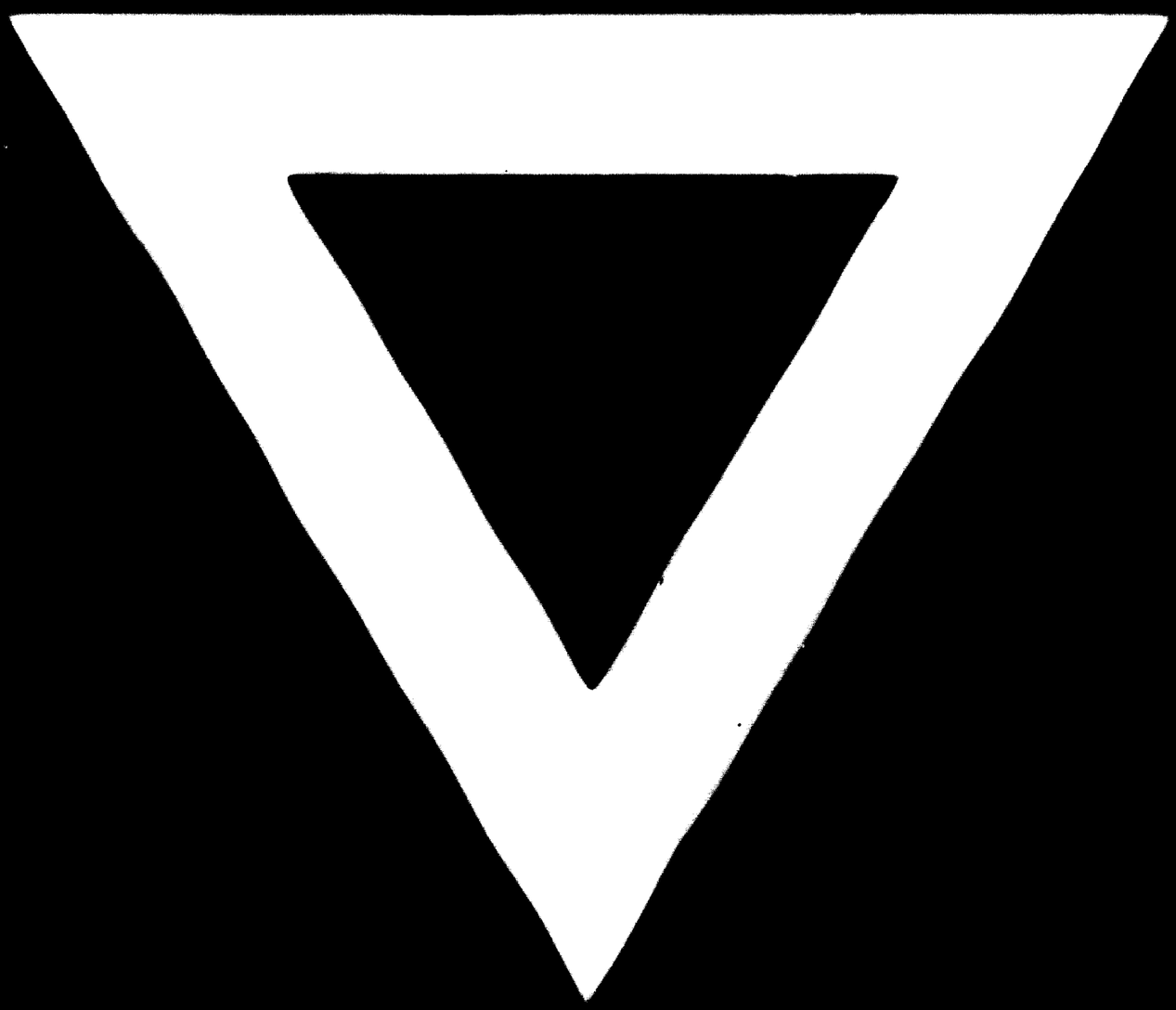

8G.01.29
AD.87.04
ILL5.5+10